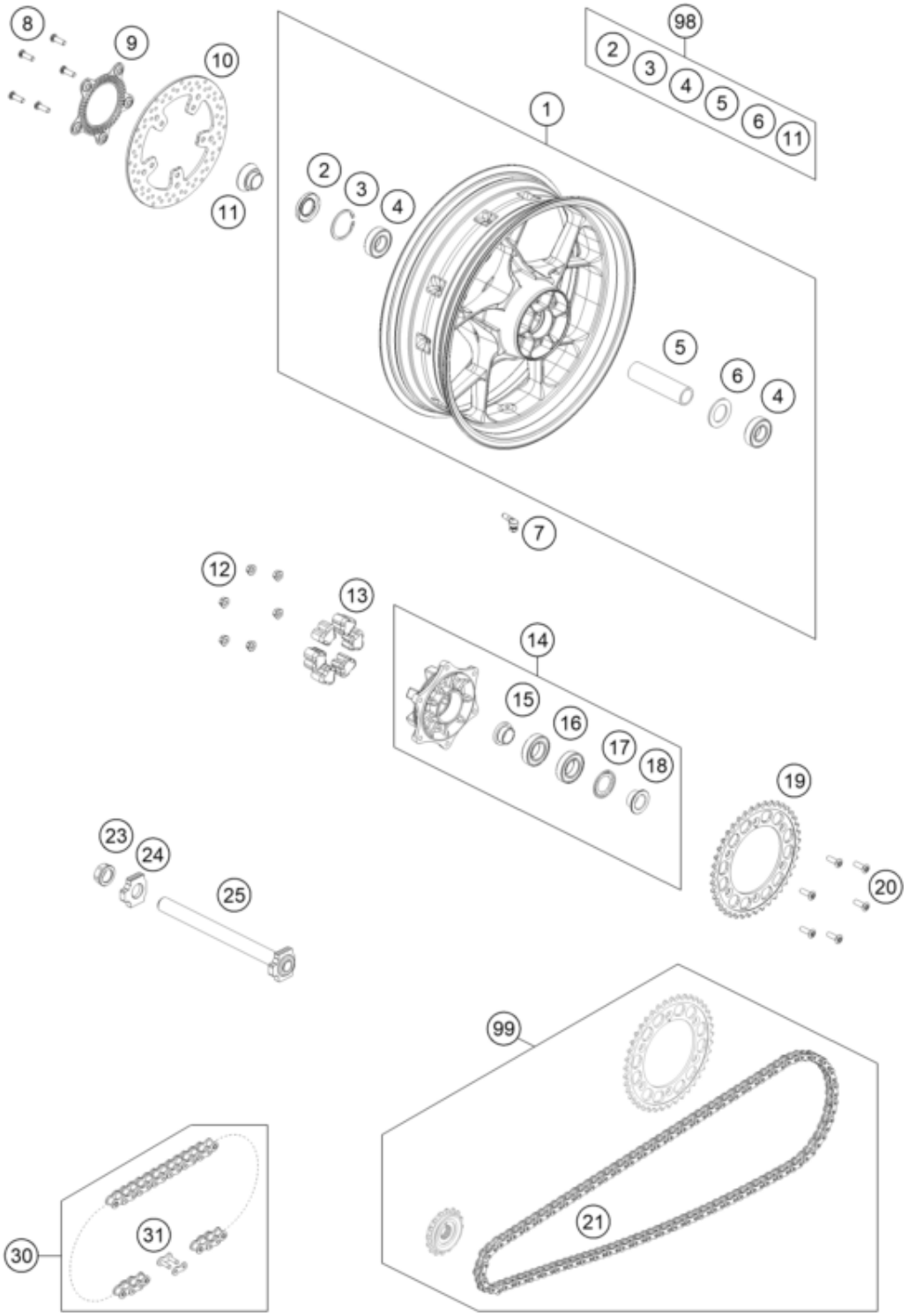

Pos	Part Number	Description	Additional Text	Quantity
1	6411000103330	Rear wheel 5,5x 17 cpl. black		1.00
2	0760305271	Radial shaft seal 30X52X7		1.00
3	0472052200	CIRCLIP DIN0472-52X2		1.00
4	0625062052	Grooved ball bear. 6205-2RSHC3		2.00
5	60010011000	Bearing spacing tube L=124.8mm		1.00
6	60010015000	Spacer ring 03		1.00
7	61009076100	VALVE ANGLED		1.00
8	76009062000	Special screw M8X25 SL TX40		5.00
9	76042021000	Sensor wheel rear		1.00
10	64110060000	Rear brake disc 240x5mm		1.00

11	64110013000	spacer rear wheel right		1.00
12	06923080003	Hex. nut DIN EN 1661 M8 WS13		6.00
13	54610459000	Rubber damping block 91		6.00
14	7501005004433	Sprocket wheel carrier cmpl. b		1.00
15	60110014000	SPACER BUSH. SPR. SUPP. IN. 06		1.00
16	0625060060	BALL BEARING 6006 DDU2CG23S6NM		2.00
17	60110016000	NILOS RING 6006AV		1.00
18	60110012000	SPACER BUSH. SPROCKET SUPP. 06		1.00
19	75010051038	sprocket 38T		0.00
19	75010051039	sprocket 39T		0.00
19	75010051040	SPROCKET STEALTH 40T 07		0.00
19	75010051041	sprocket		1.00
19	75010051042	SPROCKET STEALTH 42T 07		0.00
20	0019080266S	COUNTER-SUNK SCREW ISA45 M8X26	ONLY FOR 78003023081	6.00
21	64110065116	Chain x-ring 116 rolls endless		1.00
23	61010086000	Collar nut M25X1.5 WS=32 05		1.00
24	60010084000	Chain tension adjuster, right,		1.00
25	69010181044	Rear axel cmpl.		1.00
30	76910065118	chain DID 118 roll		0.00
31	76910066000	Rivet link chain DID 520 VP2-T		0.00
98	64110015000	wheel bearing repair kit		0.00
99	00050002098	Drive Set 16/41		0.00