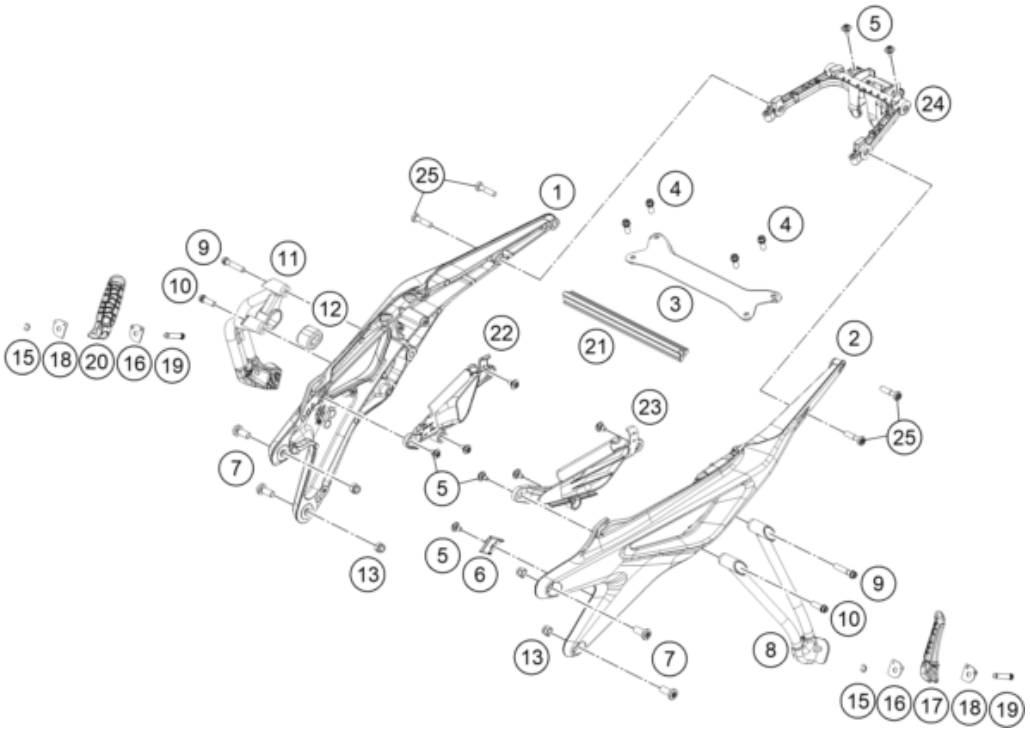

Pos	Part Number	Description	Additional Text	Quantity
1	64103002006BH	Subframe, right silv. met.		1.00
2	64103002005BH	Subframe, left silv. met.		1.00
3	6410300200430	Cross member		1.00
4	0025080186S	HH collar screw M8x18 ISA40 SS		4.00
5	83008000012	special screw M6x12x3		9.00
6	64103002010	cable holder		1.00
7	0035100249S	HH collar screw M10x24 ISA45 S		4.00
8	6410304800033	Footrest carrier rear/left		1.00
9	0025080406S	Collar screw M8x40 ISA40 SS		2.00
10	0025080256S	HH COLLAR SCREW M8X25 TX40		2.00
11	6410304900033	Footrest carrier rear/right		1.00
12	61305068000	DAMPING RUBBER		1.00
13	54310086100	SELF LOCKING NUT M10 CU WS=14		4.00
15	0799060003	retaining washer DIN 6799 - 6		2.00
16	60003152000	ENGAGE PANEL FOOTREST L/S 03		2.00
17	60003050000	FOOTREST CPL. L/S REAR 03		1.00
18	60003052000	ENGAGE PANEL FOOTREST R/S 03		2.00
19	60003044100	footrest bolt, rear		2.00
20	60003051000	Footrest cmpl. r/s rear 03		1.00
21	64103004000	Strut		1.00
22	64106041050	Cover inlet port right		1.00
23	64106040050	Cover inlet port left		1.00
24	64108019050	rear reinforcement		1.00
25	0035080356S	SCREW M8X35 ISA45 SS		4.00