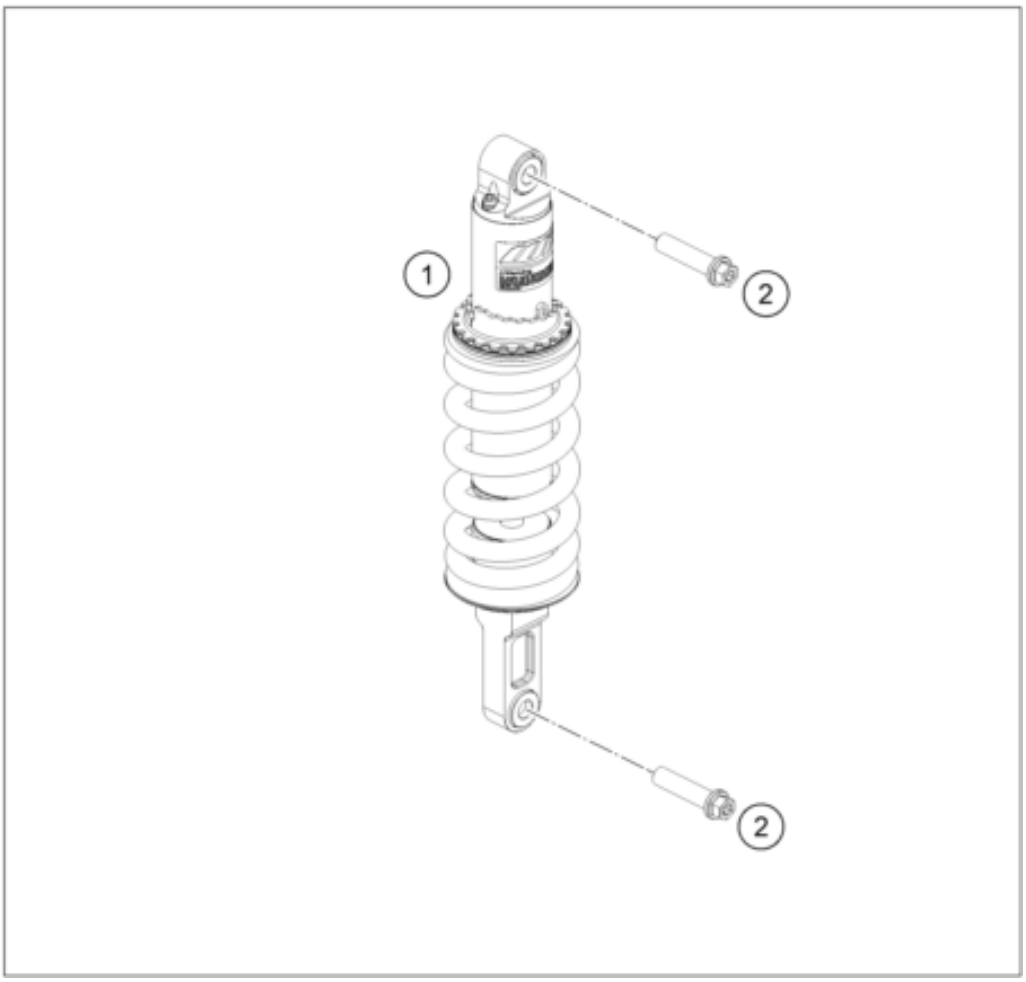

Pos	Part Number	Description	Additional Text	Quantity
1	01584R2601	Monoshock Duke 790	L-PART	1.00
2	0025120506S	HH COLLAR SCREW M12X50 TX45		2.00