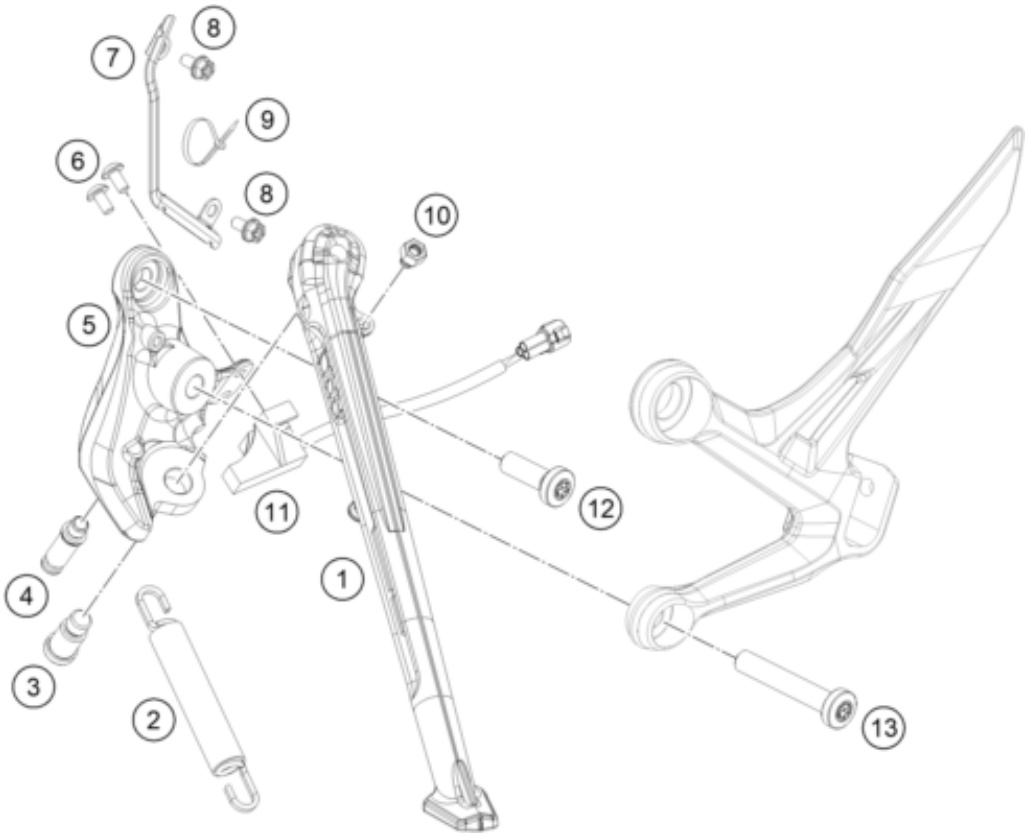

Pos	Part Number	Description	Additional Text	Quantity
1	6410302300033	Sidestand		1.00
2	61003024000	SPRING L=116 MM 05		1.00
3	62503027200	Screw for side stand M10x31.2		1.00
4	64103028001	Special screw stand spring		1.00
5	6410302610033	Side Stand Bracket		1.00
6	58605083010	SCREW TORX M5X10 05		2.00
7	64103001099	racket side-stand-cable		1.00
8	0025050106	HH collar screw M5x10 TX30		2.00
9	44011076140	CABLE TIE 140/2,5MM BLACK		3.00
10	90103029000	MAGNET HOLDER	L-PART	1.00
11	93511045000	SWITCH SIDE STAND	L-PART	1.00
12	0035100309S	AH collar screw M10x30 ISA45	ONLY FOR ADVENTURE R	1.00
13	0035100609S	AH-COLLAR SCREW M10X60 ISA45		1.00