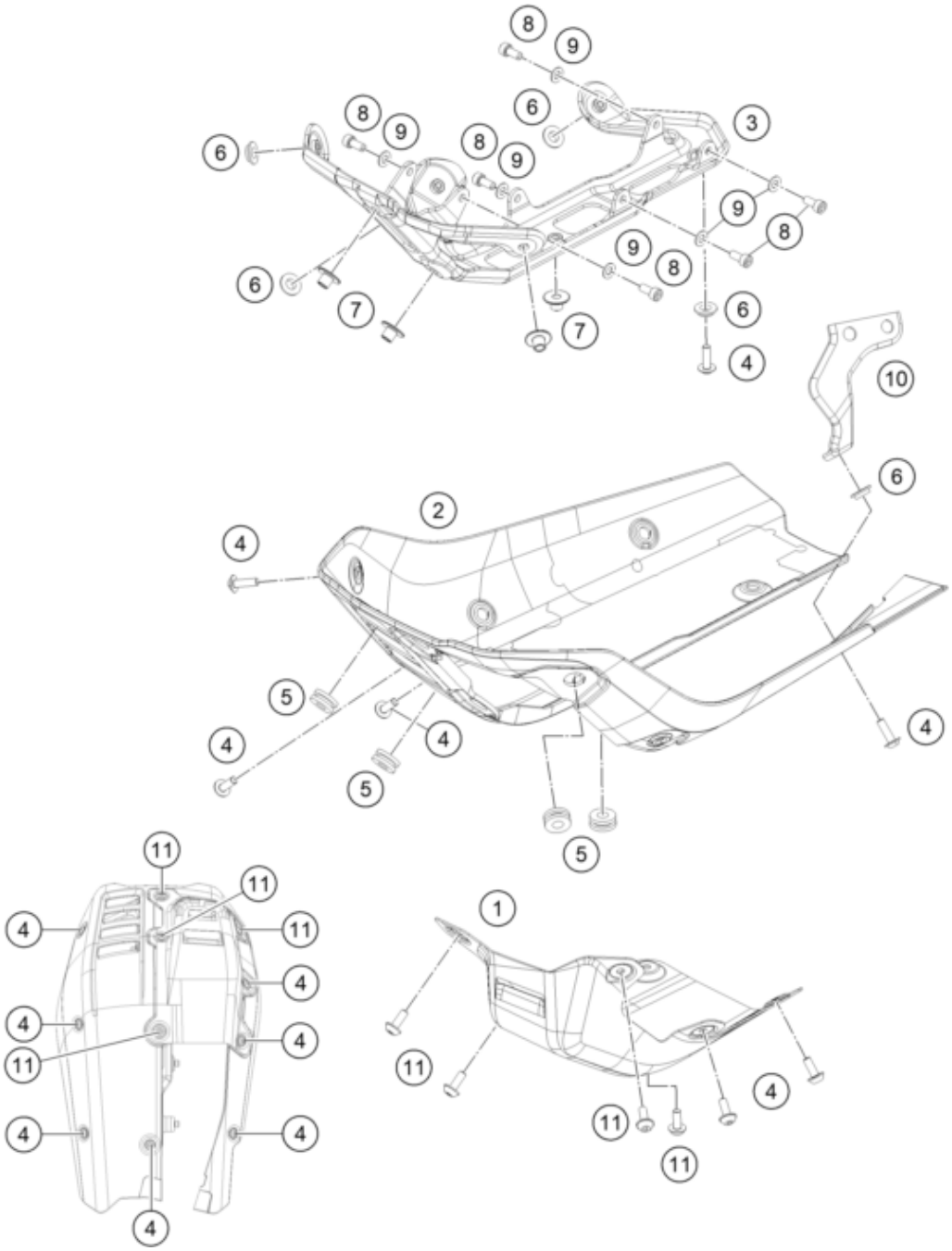

Pos	Part Number	Description	Additional Text	Quantity
1	95808020010	Front spoiler, front part		1.00
2	95808020000	Front spoiler		1.00
3	95808020050	Bracket Assembly Belly Pan fro		1.00
4	90508006003	AH SCREW M6X1X20		7.00
5	93008028050	Rubber bushing		4.00
6	95808020030	Bushing		5.00
7	93035065030	distance sleeve		4.00
8	90502012001	BOLT SOCKET-M6X1XL14XCL 10.9XB		6.00
9	J125060006	Washer M6		6.00
10	95808020025	Rear retaining bracket, front		1.00
11	J031060256	Screw M6x25		4.00