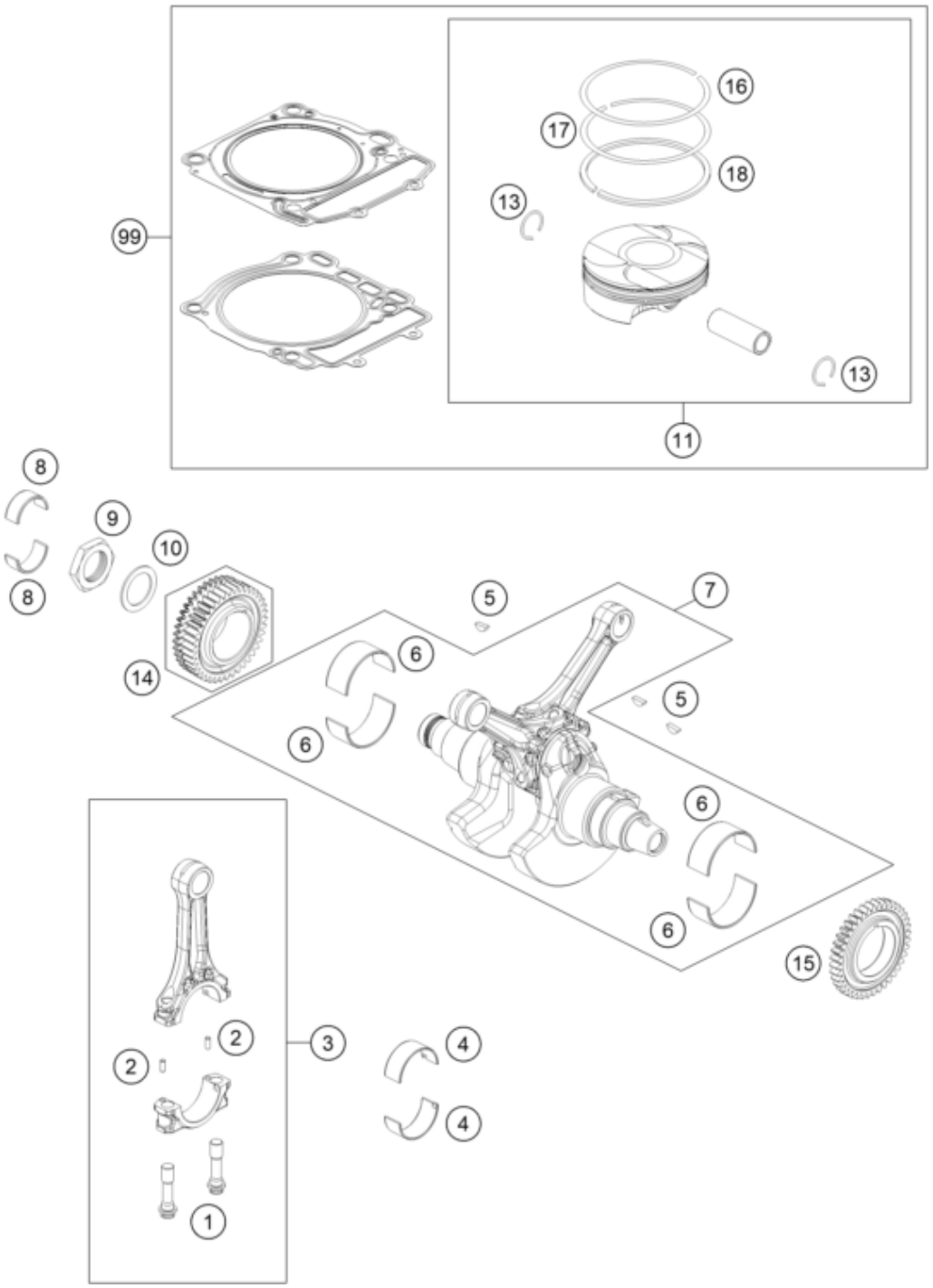

Pos	Part Number	Description	Additional Text	Quantity
1	61230015100	CONNECTING ROD SCREW MJ10X1		4.00
2	0402040980	Needle roll.DIN5402 NRB 4X9.8		4.00
3	61430015000	CON ROD		2.00
4	612300151101	SPLIT BEAR. BUSH RED		0.00
4	612300151102	SPLIT BEAR. BUSH BLUE		0.00
4	612300151103	SPLIT BEAR. BUSH YELLOW		0.00
5	0888040050	woodruff key DIN 6888 4x5x13		3.00
6	612300820001	SPLIT BEAR. BUSH RED 08		0.00
6	612300820002	SPLIT BEAR. BUSH BLUE 08		0.00
6	612300820003	SPLIT BEAR. BUSH YELLOW 08		0.00
7	61630018000	Crankshaft complete		1.00

8	60030026010	BUSHING BOWL 28X32X13 03		2.00
9	60032009050	HH-NUT M33X1,5 L/S WS46 03		1.00
10	60032009040	WASHER 33,2X46X2 03		1.00
11	61430007000 I	PISTON CPL. SIZE I		0.00
11	61430007000 II	PISTON CPL. SIZE II		0.00
13	75030074000	CIRCLIP LC4 07		4.00
14	61330055000	PRIMARY GEAR CPL.		1.00
15	61230056000	DRIVE WHEEL BALANCER SHAFT 08		1.00
16	61330030000	RECTANGULAR RING		2.00
17	61330031000	TAPERED COMP. PISTON RING		2.00
18	61330032100	OIL SCRAPER RING D108		2.00
99	61730007010 I	Piston Kit I		0.00
99	61730007010 II	Piston Kit II		0.00