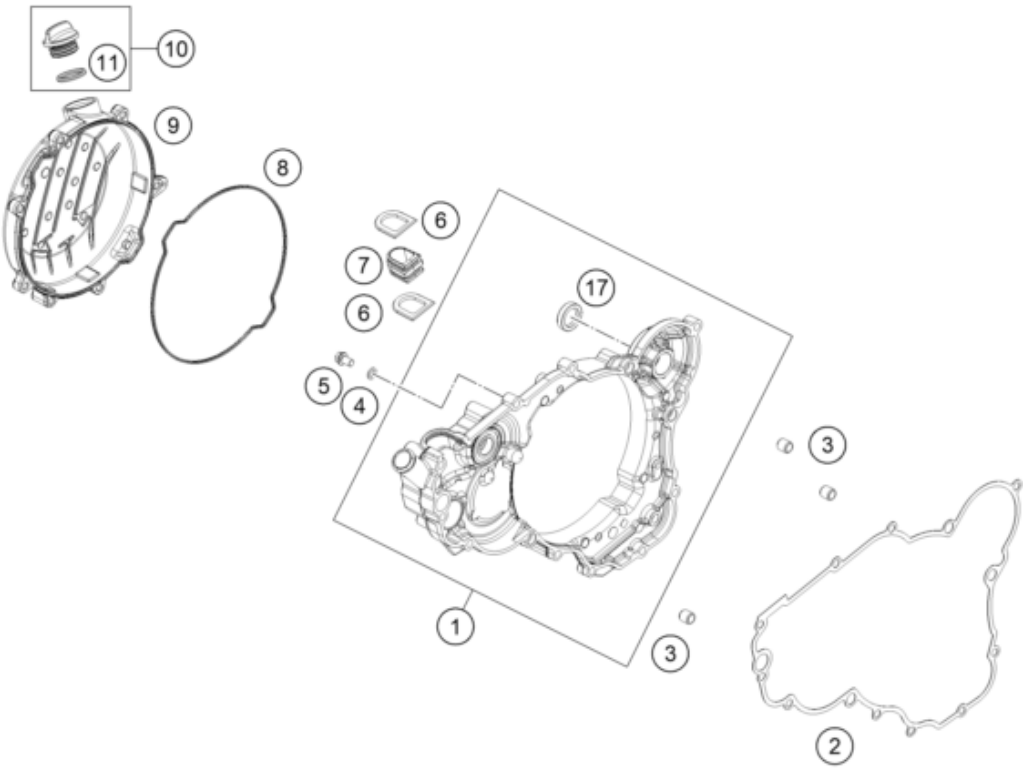


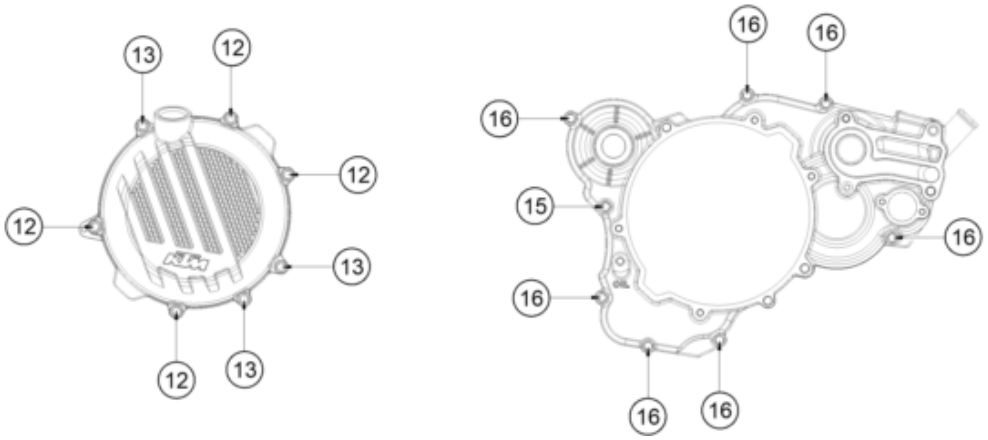


| Pos | Part Number | Description | Additional Text | Quantity |
|---|---|---|---|---|
| 1 | 55430001144 | Inner clutch cover cpl. 2018 | | 1.00 |
| 2 | 55430025100 | CLUTCH COVER GASKET INSIDE | | 1.00 |
| 3 | 49030090100 | DOWEL 9,8 X7X10 | | 3.00 |
| 4 | 0603061001 | CU-SEAL RING DIN7603-6X10X1 | | 1.00 |
| 5 | 0025060106 | HH collar screw M6x10 TX30 | | 1.00 |
| 6 | 54637107000 | SEALING ELEMENT BOTTOM | | 2.00 |
| 7 | 54837091100 | SEALING CARRIER 07 | | 1.00 |
| 8 | 55430027000 | CLUTCH COVER GASKET OUTSIDE | | 1.00 |
| 9 | 5543002610015 | Clutch cover | | 1.00 |
| 10 | 79430020033 | Oil filler cap cmpl. M24x3 | | 1.00 |
| 11 | 0770191015 | O-RING 19,00X3,00 NBR | | 1.00 |
| 12 | 0025060206 | HH collar screw M6x20 TX30 | | 4.00 |
| 13 | 0025060606 | HH collar screw M6x60 TX30 | | 3.00 |
| 15 | 0025060306 | HH collar screw M6x30 TX30 | | 1.00 |
| 16 | 0025060256 | HH collar screw M6x25 TX30 | | 7.00 |

| | | | | |
|---|---|---|---|---|
| 17 | 0760193070 | SHAFT SEAL RING 19X30X7 B | | 1.00 |