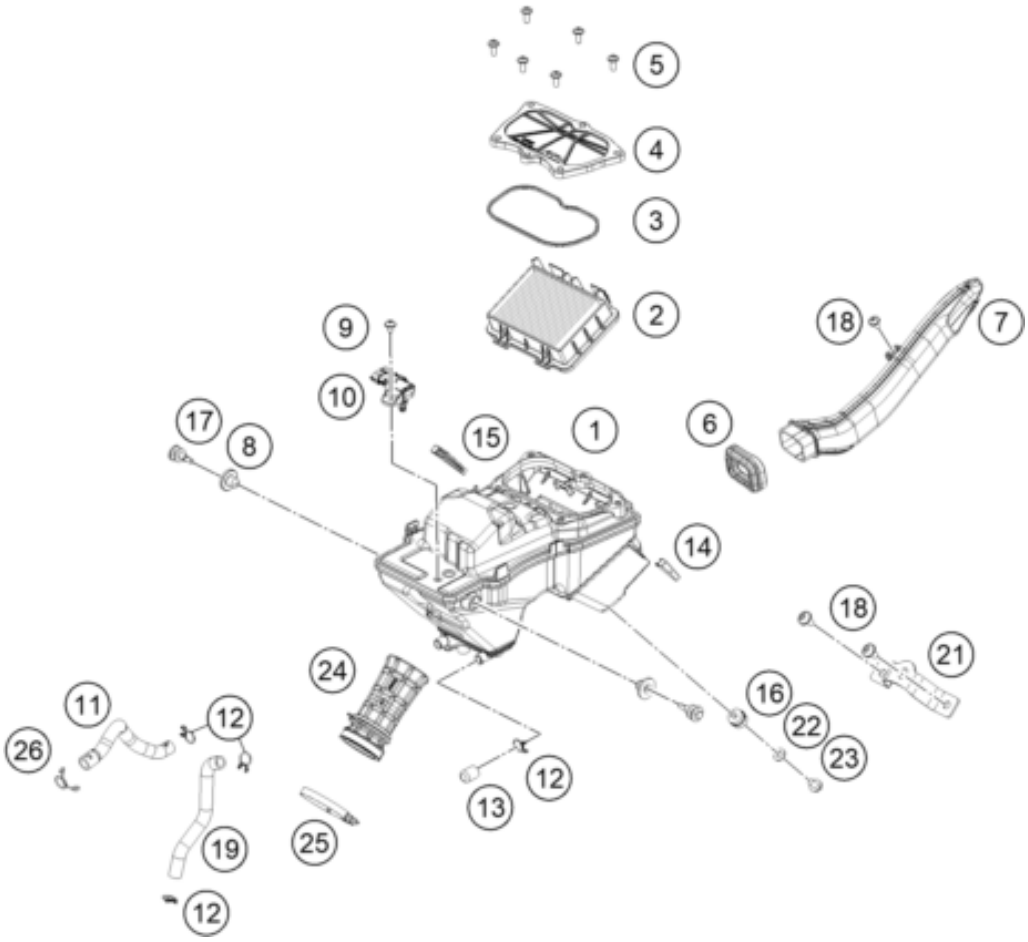


| Pos | Part Number | Description | Additional Text | Quantity |
|---|---|---|---|---|
| 1 | 94306001000 | Air filter box | | 1.00 |
| 2 | 93006015000 | FILTER | | 1.00 |
| 3 | 93006020050 | Seal | | 1.00 |
| 4 | 93006002000 | Air filter box cover | | 1.00 |
| 5 | 93006039000 | Flat-head screw M6 | | 6.00 |
| 6 | 93006001060 | Carburetor connection boot | | 1.00 |
| 7 | 95806040000 | Intake snorkel | | 1.00 |
| 8 | 93006001080 | Damping rubber | | 2.00 |
| 9 | J031060103 | Lens head screw M6X10 | | 1.00 |
| 10 | 90141071000 | TMAP-SENSOR | | 1.00 |
| 11 | 93030088050 | Engine vent hose | | 1.00 |
| 12 | 90130087001 | HOSE CLAMP | | 4.00 |
| 13 | 93030089000 | Plug | | 1.00 |
| 14 | 93006001015 | Rubber cowl pad | | 1.00 |
| 15 | 93006021000 | Distance piece air filter box | | 1.00 |
| 16 | 90106001007 | SILENT BLOCK AIRFILTER | | 1.00 |
| 17 | J025080246 | Hex collar screw. M8x23.5 | | 2.00 |
| 18 | 90508006001 | SOCKET HEAD BOLT M6X12 | | 3.00 |
| 19 | 93030087050 | Engine vent hose | | 1.00 |
| 21 | 95803002021 | Retaining bracket, air filter | | 1.00 |
| 22 | J125060004 | Washer, M6 | | 1.00 |
| 23 | J025060082 | bolt-flanged-small | | 1.00 |
| 24 | 93306026000 | CONNECTING TUBE | | 1.00 |

| | | | | |
|---|---|---|---|---|
| 25 | 90241002010 | hose clamp | | 1.00 |
| 26 | 90607017000 | CLAMP 16MM | | 1.00 |