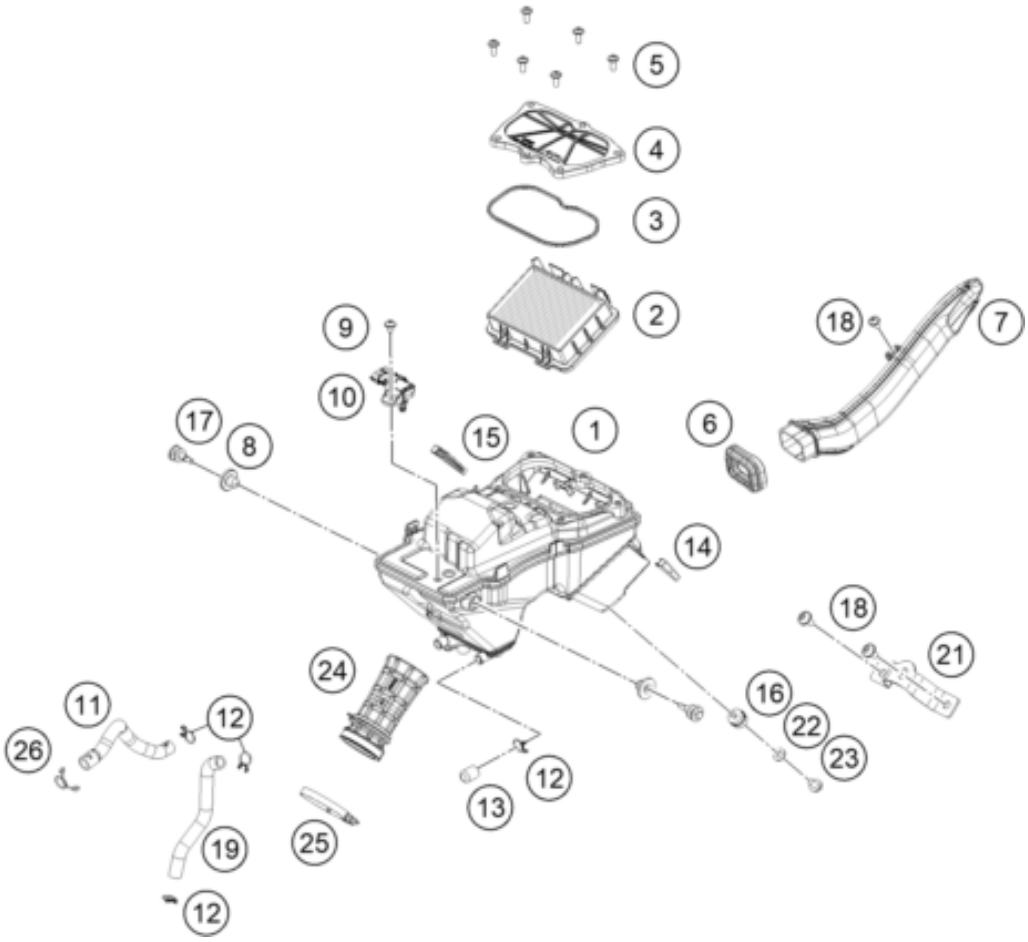

Pos	Part Number	Description	Additional Text	Quantity
1	94306001000	Air filter box		1.00
2	93006015000	FILTER		1.00
3	93006020050	Seal		1.00
4	93006002000	Air filter box cover		1.00
5	93006039000	Flat-head screw M6		6.00
6	93006001060	Carburetor connection boot		1.00
7	95806040000	Intake snorkel		1.00
8	93006001080	Damping rubber		2.00
9	J031060103	Lens head screw M6X10		1.00
10	90141071000	TMAP-SENSOR		1.00
11	93030088050	Engine vent hose		1.00
12	90130087001	HOSE CLAMP		4.00
13	93030089000	Plug		1.00
14	93006001015	Rubber cowl pad		1.00
15	93006021000	Distance piece air filter box		1.00
16	90106001007	SILENT BLOCK AIRFILTER		1.00
17	J025080246	Hex collar screw. M8x23.5		2.00
18	90508006001	SOCKET HEAD BOLT M6X12		3.00
19	93030087050	Engine vent hose		1.00
21	95803002021	Retaining bracket, air filter		1.00
22	J125060004	Washer, M6		1.00
23	J025060082	bolt-flanged-small		1.00
24	93306026000	CONNECTING TUBE		1.00

25	90241002010	hose clamp		1.00
26	90607017000	CLAMP 16MM		1.00