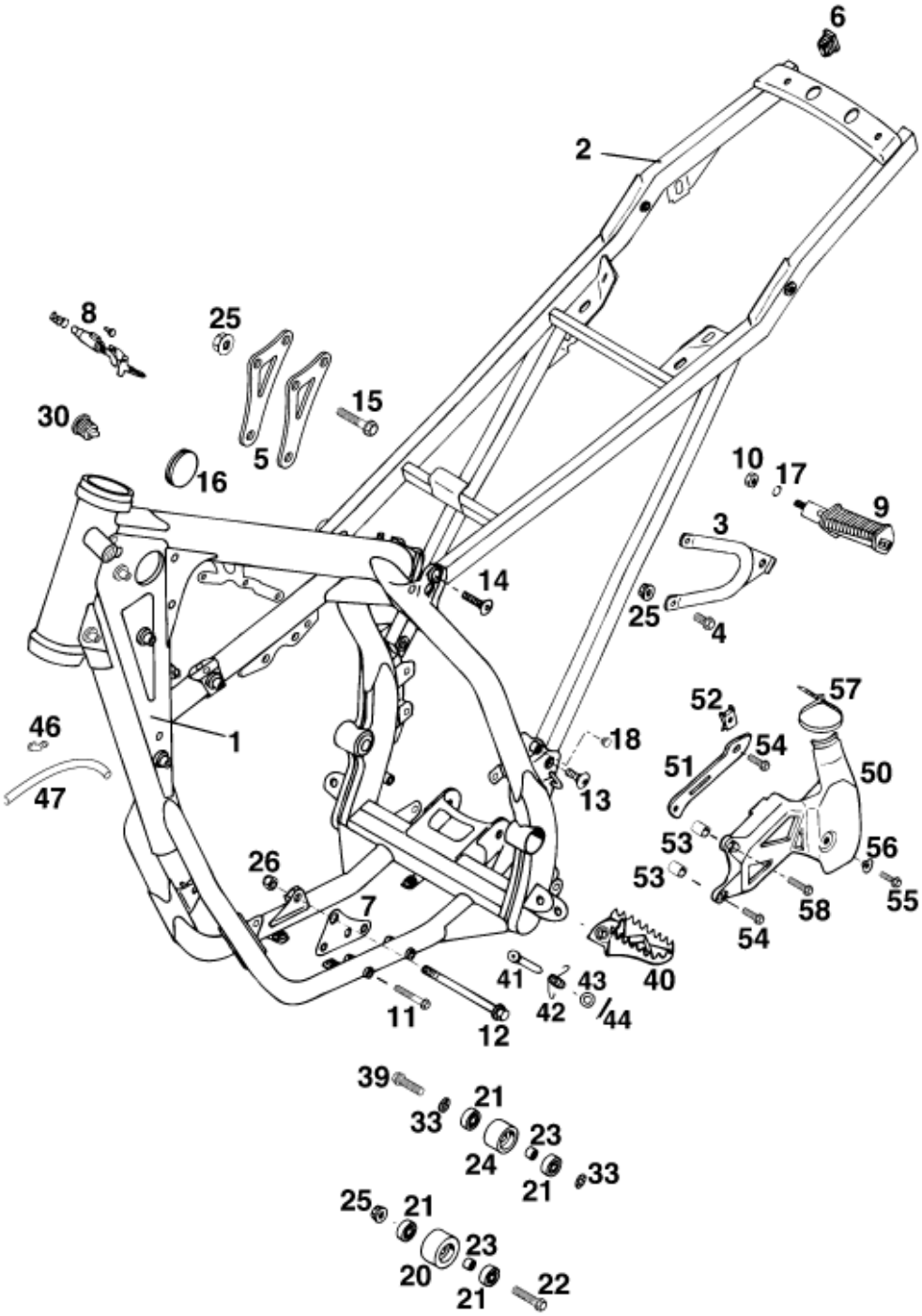

Pos	Part Number	Description	Additional Text	Quantity
0	49003350000	FOOTREST REAR R/S CPL.	200 EXC SGP	1.00
0	54603103000	FOOT REST BRACKET REAR R/S		1.00
0	54603140100	FOOT REST R/S WIDE '		1.00
1*	54603401700	FRAME FOR SEM-IGNITION '97		1.00
2	54603402000	% SUBFRAME STEEL '94		1.00
3	58303003000	FOOTREST BRACKET REAR L/S		1.00
4	0015080163	HH COLLAR SCREW M 8X16 WS=10		4.00
5	54603045100	* ENGINE BRACE 250/300/360 '94		2.00
6	58303002090	PLUG 12 X 17 MM		2.00
7	54603055000	ENGINE MOUNTING 250/300 '90		1.00
8*	71003007000	STEERING HEAD LOCK CPL. ZADI		1.00

9	49003250000	FOOTREST REAR L/S CPL.	200 EXC SGP	1.00
10	0934100003	HEXAGON NUT DIN0934-M10		2.00
11	0015060403	HH COLLAR SCREW M 6X40 WS=8	450 SMR	2.00
12	54603013000	engine brac.scr. M10x105 WS13		2.00
13	54610052000	SPROCKET SCREW-AH M8X20 WS=6		2.00
14	54510052000	SPROCKET SCREW-AH M 8X26		2.00
15	56530079000	HH COLLAR SCREW M 8X44 WS13		3.00
16	54606004000	PLUG 37MM		2.00
17	0127100003	SPRING RING DIN0127-B10		2.00
18	54403135000	PLASTIC CAP SFL10		1.00
20	50203053100	CHAIN ROLL D=35MM		1.00
21	0625006087	Grooved ball bearing 608 2RS C		4.00
22	0015080353	HH COLLAR SCREW M 8X35 WS=10	FC	1.00
23	74003021000	BUSHING 8.2 X 12 X 6		2.00
24	50203053000	CHAIN ROLL D=30MM		1.00
25	54310086000			8.00
26	54310086100	SELF LOCKING NUT M10 CU WS=14		2.00
30	42007049000	PLASTIC CAP		1.00
33	36003014000	LOCK WASHER 8MM		2.00
39	0015080303	HH COLLAR SCREW M 8X30 WS=10		1.00
40	54603040100	% FOOT REST L/S WIDE '		1.00
41	54603044000	BOLT FOR FOOTREST 9,8 X 50	FS	2.00
42	54603041000	FOOTREST SPRING L/S & R/S		2.00
43	0125100003	washer DIN 125 A 10.5	ONLY FOR 640 DUKE	2.00
44	0094032253	PIN DIN0094-3,2X25 STEEL		2.00
46*	50303089000	ANGLE PIECE '97		1.00
47	55007016001	PVC-HOSE 7X10 PER METER		0.00
50	54607061000	SPROCKET COVER		1.00
51	54630061000	CHAIN SLIDING PLATE 14 T/15 T		1.00
52	54603048100	clip nut M6		1.00
53	54613038150	BUSHING 6,5X8X11		2.00
54	0015060203	HH COLLAR SCREW M 6X20 WS=8		2.00
55	0015050203	HH COLLAR SCREW M 5X20 WS=8		1.00
56	54603073000	COLLAR BUSHING 5 X 10 X 6 ALU		1.00
57	44011076200	Cable tie 200/4.6mm black		1.00
58	0015060253	HH COLLAR SCREW M 6X25 WS=8		1.00

* = New part