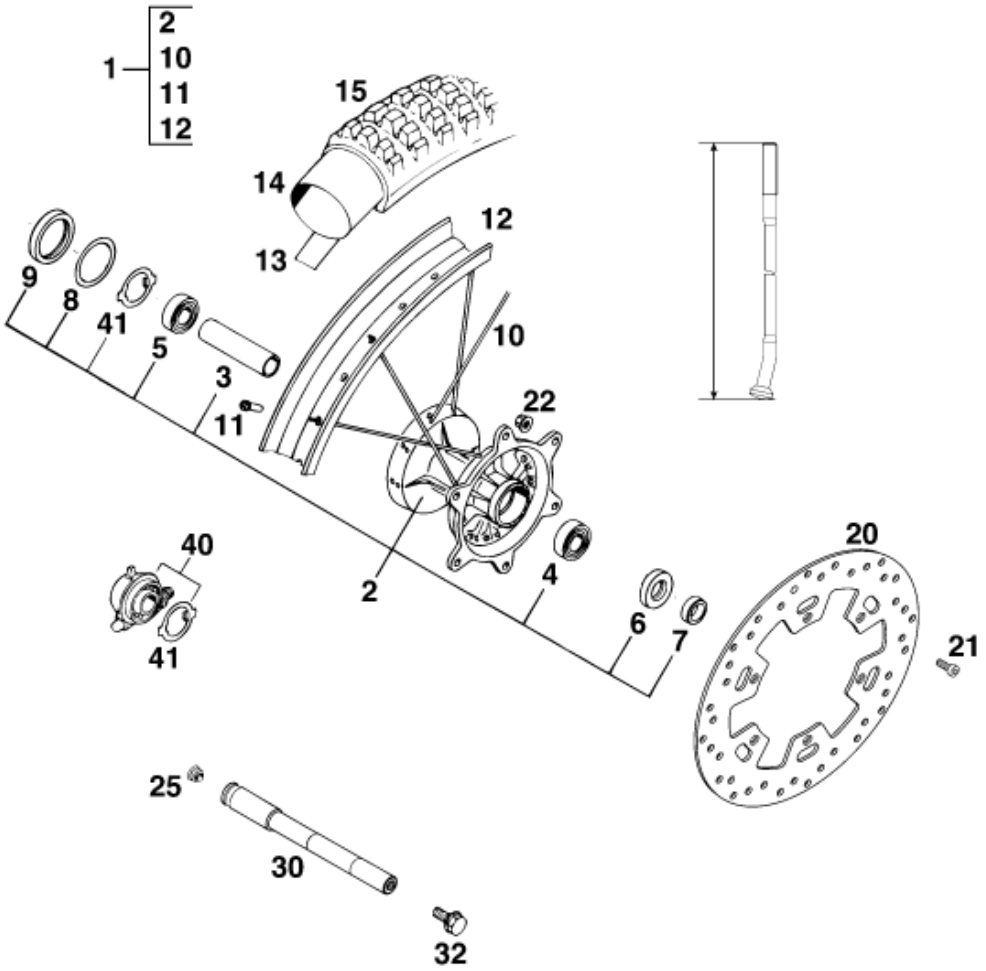

Pos	Part Number	Description	Additional Text	Quantity
1	51109001244			1.00
2	5460901004490	FRONT HUB CPL. SILVER GS'93		1.00
3	54609011000	BEAR.SPACER TUBE 17,5X22X64,5		1.00
4	0625060037	GR.BALL BEAR. 6003-2RSH/C3HMTF		1.00
5	0625062032	GR.BALL BEAR. 6203-2RSHC3HMTF		1.00
6	0760253570	SHAFT SEAL RING 25X35X7 BTSL		1.00
7	54609051000	SPACER RING 17X25X7,5		1.00
8	58111054000	WASHER 40 X 52 X 0,15 '92		1.00
9	0760405270	SHAFT SEAL RING 40X52X7 B		1.00
10	58309071234	SPOKE M5X234-15G 21" DDE		36.00
11	56509072000	STEEL NIPPLE M5		36.00
12	51109070200	FRONT RIM 1,6X21" ALU		1.00
13	51109073100			1.00
14	51109075100			1.00
15	51109074200	TYRE 2.75X21" 45P TW25 '97		1.00
20	51109060000	FRONT BRAKE DISC 260 MM '96		1.00
21	0984060163	AH SCREW DIN6912-M 6X16	WITH LOW HEAD	6.00
22	56509064000	SELF LOCKING NUT M6		6.00
25	55009086000	PLUG SFL13		1.00
30	58009181600	WHEEL SPINDLE FRT L=226MM'95		1.00
32	49032011000	HH COLLAR SCREW M10X20 WS=17		1.00

40	58111052100	SPEEDOMETER DRIVE 748217(3,0)		1.00
41	58111053100	DRIVING DOG F.SPEEDOM.DRIVE'92		1.00