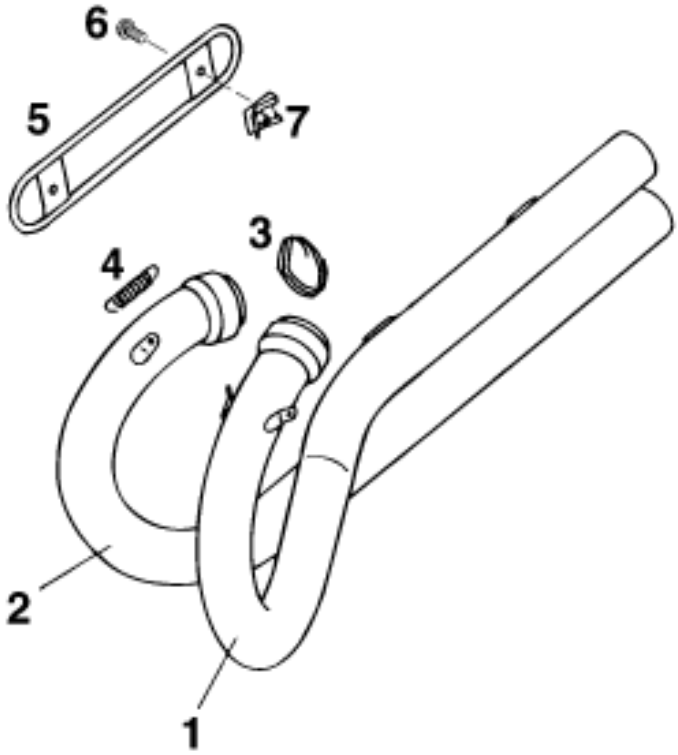

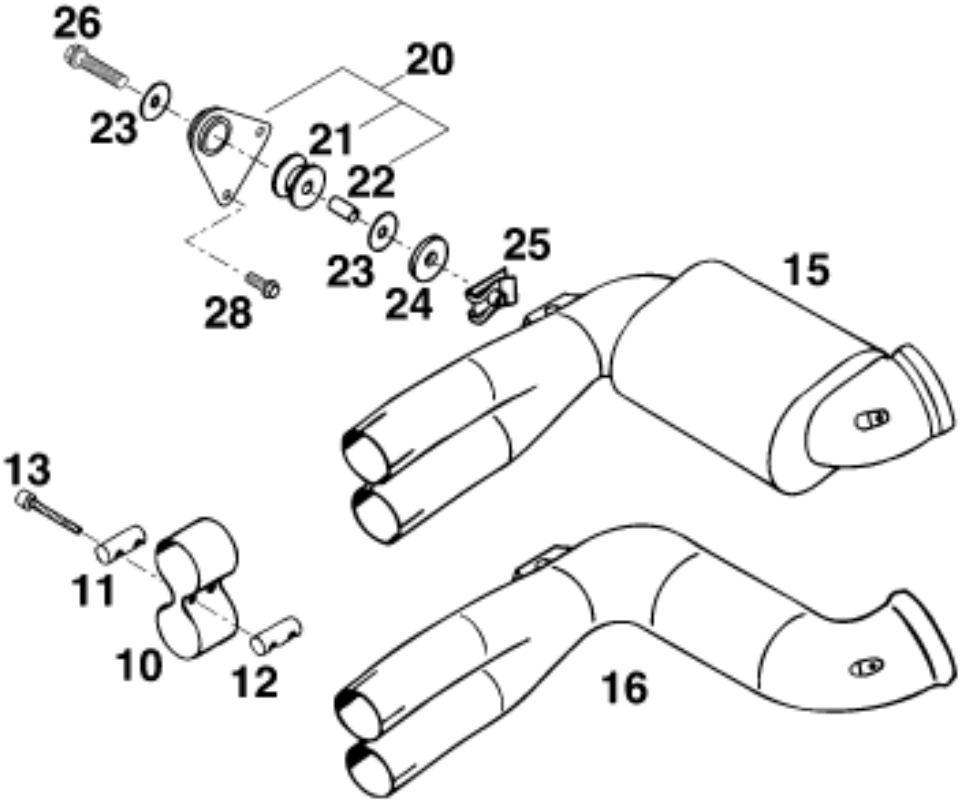

Pos	Part Number	Description	Additional Text	Quantity
1*	57505051200	EXHAUST PIPE L/S "KTM *575 L"		1.00
1*	58305051300	EXHAUST PIPE L/S "KTM *583 L"		1.00
2	57505151100	EXHAUST PIPE R/S "KTM 575 R"		1.00

2	58305151100	EXHAUST PIPE R/S "KTM 583 R"		1.00
3*	58305053001	CERAMIC LINE 1 METER		1.00
4	54309036000	RETURN SPRING L=38 MM		4.00
5	58305050100	HEAT PROTECTOR CHROME WHITE'94		1.00
6*	0015060123	HH COLLAR SCREW M 6X12 WS=8		2.00
7*	54603048300	RANGE CHANGE METAL NUT M6 INOX		2.00
10*	58305058150	CLAMP LC4'95		1.00
11*	58305058051	GAG CLAMP OUTSIDE INOX		1.00
12*	58305058052	GAG CLAMP INSIDE INOX		1.00
13*	0912060404	AH SCREW DIN0912-M 6X40 A2		2.00
15*	58305075300	PRE SILENCER "KTM *V1" '95		1.00
16*	58305175200	TUBE-PRE SILENCER '95		1.00
20*	58305065044	% BRACKET-PRE SILENCER CPL. 95		1.00
21	54305068100	damp. component silicone grey		1.00
22	56505069000	Spacer bushing 8.4X12X16		1.00
23	0021080003	WASHER DIN9021-A 8,4		2.00
24	51005067000	INSOLATE WASHER 8,5X28X3		1.00
25	54603048000	RANGE CHANGE METAL NUT M8		1.00
26*	0015080353	HH COLLAR SCREW M 8X35 WS=10	FC	1.00
28*	0015060163	HH COLLAR SCREW M 6X16 WS=8	FE, FS	2.00

* = New part