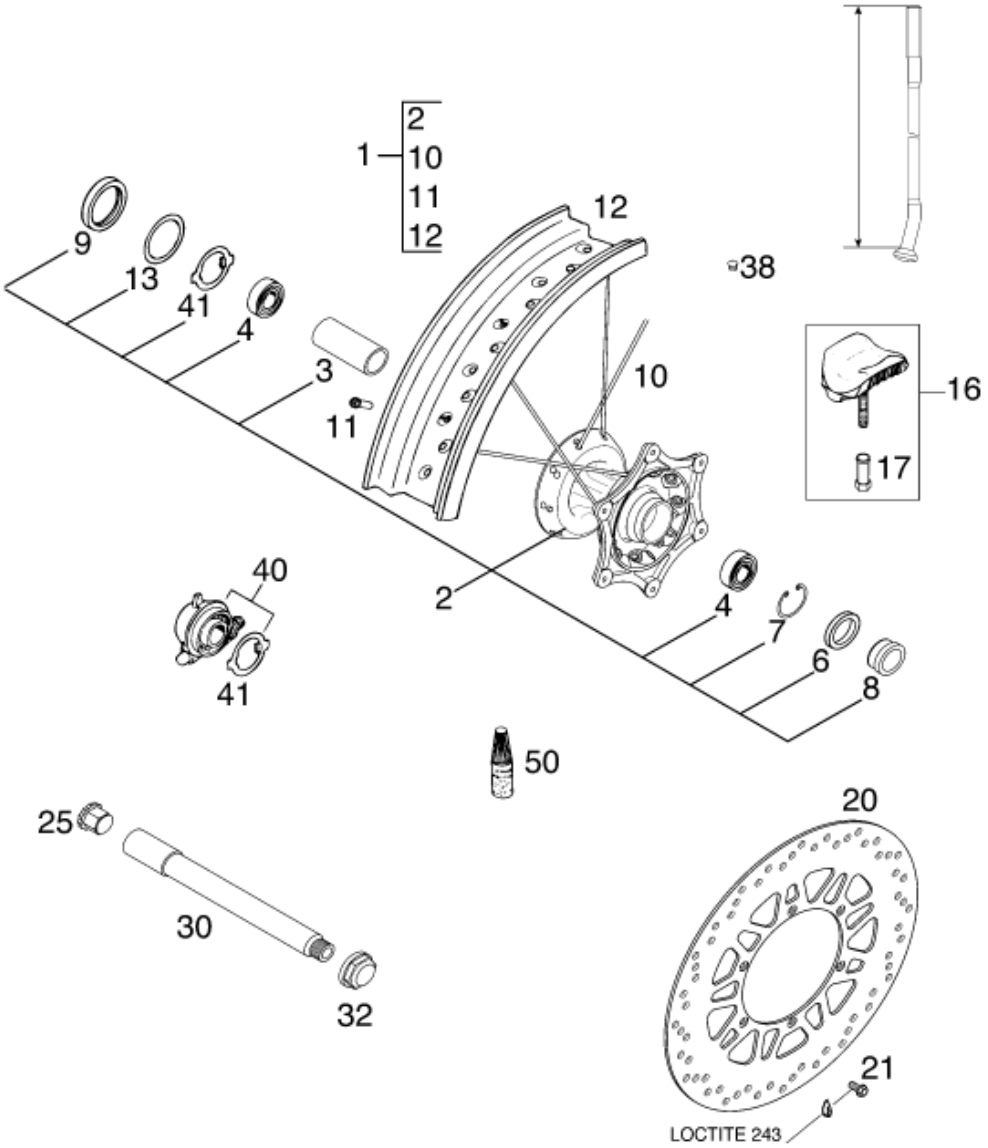

Pos	Part Number	Description	Additional Text	Quantity