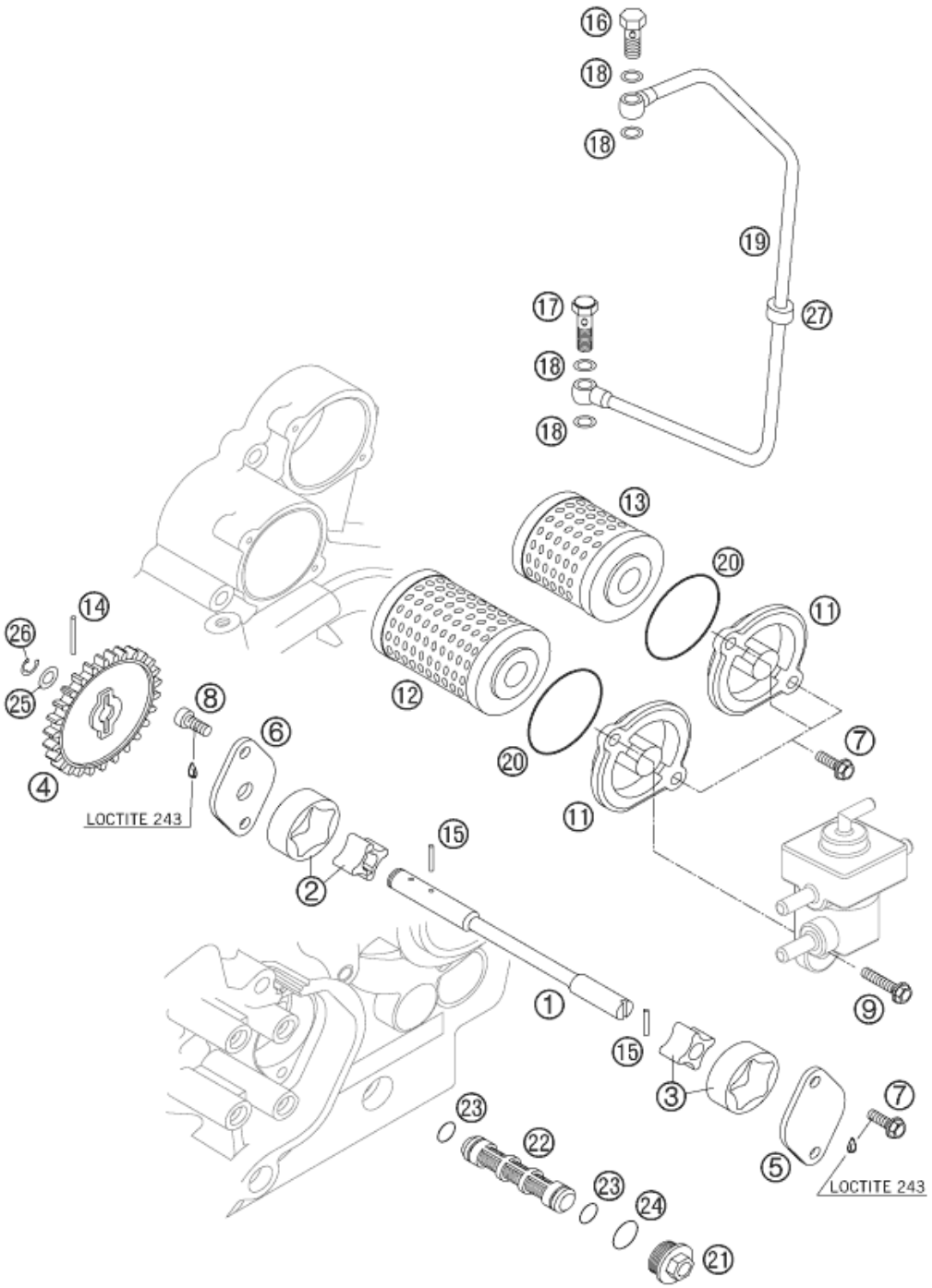

Pos	Part Number	Description	Additional Text	Quantity
1	59038002000	OIL PUMP SHAFT		1.00
2	59038011010	OILPUMP ROTOR CPL. 10MM G-73R		1.00
3	59038011012	OILPUMP ROTOR 12MM G-95R/003		1.00
4	58438001000	OIL PUMP GEAR 26-T		1.00
5	59038004000	OIL PUMP COVER L/S		1.00
6	59038003000	OIL PUMP COVER R/S 8MM		1.00
7	0015050163	HH COLLAR SCREW M 5X16 WS=8		5.00
8	0984050122	AH SCREW DIN6912-M 5X12		2.00
9	0015050203	HH COLLAR SCREW M 5X20 WS=8		1.00
11	59038041000	OIL FILTER COVER RACING		2.00
12	58038005100	OIL FILTER LONG		1.00

13	59038046100	OIL FILTER SHORT		1.00
14	0402251980	NEEDLEROL.DIN5402 NRA 2,5X19,8		1.00
15	0402251180	NEEDLE ROLLER DIN5402 2,5X11,8		2.00
16*	58038029000	BANJO BOLT M8X1		1.00
17	59038029000	Jet screw M8x1		1.00
18	0603082121	SEAL RING CU DIN7603- 8X12X1		4.00
19	59038035000	OIL LINE STEEL CASE-CYL.HEAD	450 MXC, EXC, 525	1.00
20	0770400025	O-RING 40,00X2,50 NBR 70		2.00
21	59038017000	PLUG M20X1,5 WS=13		1.00
22	59038016000	OIL SCREEN 15X83MM		1.00
23	0770125015	O-RING 12,5X1,5 NBR		2.00
24	0770020170	O-RING 17,17X1,78 GLO		1.00
25	58038007755	STOP DISK 8,1 X 15 X 0,5		1.00
26	0799060000	TAB WASHER DIN6799-RS 6,0		1.00
27	58405098000	RUBBERBUFFER 8X17X10 SILENC'97		1.00

* = New part