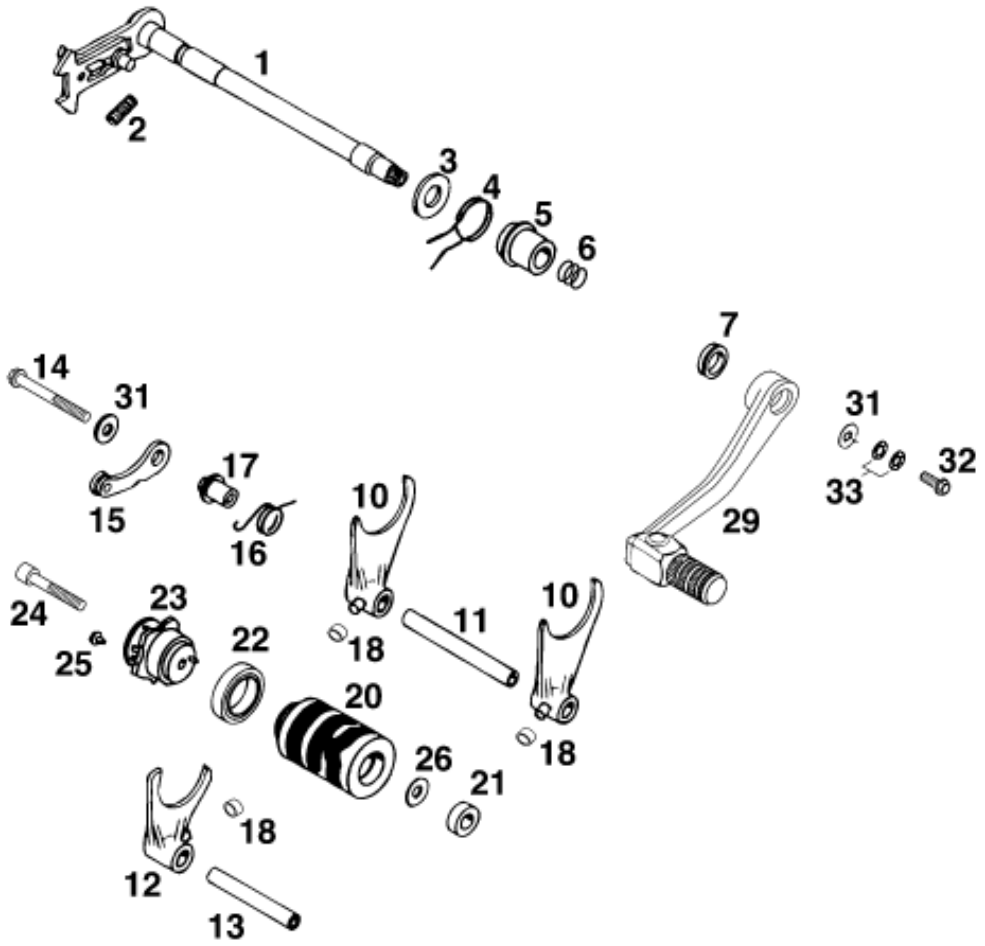

Pos	Part Number	Description	Additional Text	Quantity
1	58334005044	SHIFT SHAFT CPL. LC4'94		1.00
2	56534013100	TENSIONING SPRING 0,8MM		1.00
3	58034010000	STEEL WASHER 14 X 28 X 2		1.00
4	58034014000	RETURN SPRING		1.00
5	58334020000	SPRING SLEEVE		1.00
6	0770125020	O-RING 12,50X2,00 NBR 70		3.00
7	58033027000	V-SEAL RING V-14-A		1.00
10	58034002300	SHIFT FORK 1ST/4TH+2ND GEAR'98		2.00
11	58034004000	SHIFT RAIL 1ST/4TH + 2ND GEAR		1.00
12	58034001300	SHIFT FORK 3RD/5TH GEAR '98		1.00
13	58034003000	SHIFT RAIL 3RD/5TH GEAR		1.00
14	0015060653	HH COLLAR SCREW M 6X65 WS=8		1.00
15	58334024044	LOCKING LEVER CPL. '94		1.00
16	58034023500	SPRING		1.00
17	58334017000	SPRING SLEEVE		1.00
18	50334018100	SHIFTING ROLLER 6X8X5,2		3.00
20	58334012100	SHIFT ROLLER ALU '98		1.00
21	0625006087	Grooved ball bearing 608 2RS C		1.00
22	0625618050	BALL BEARING 61805 C3		1.00
23	58334015044	SHIFT LOCATION DRUM CPL. '		1.00
24	0912060404	AH SCREW DIN0912-M 6X40 A2		1.00
25	58034016500	SHIFT BUTTON		1.00

26	51006097000	WASHER 6,2X22X1,ST30,W.GALV.		1.00
29	58434031044	SHIFT LEVER CPL. SX,SXC,SC '98		1.00
31	50232050000	WASHER 6,2X18X2	125	2.00
32	0015060163	HH COLLAR SCREW M 6X16 WS=8	FE, FS	1.00
33	50233041000	Pair of washers M6 NORDLOCK		1.00