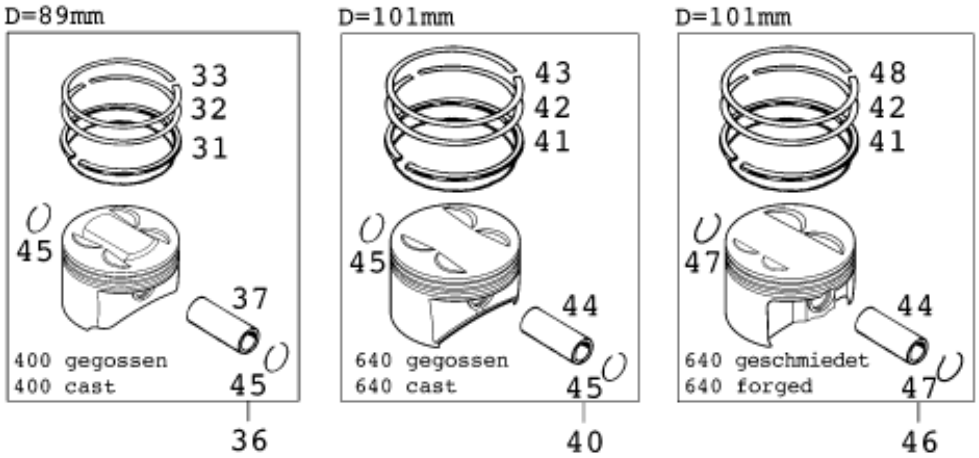

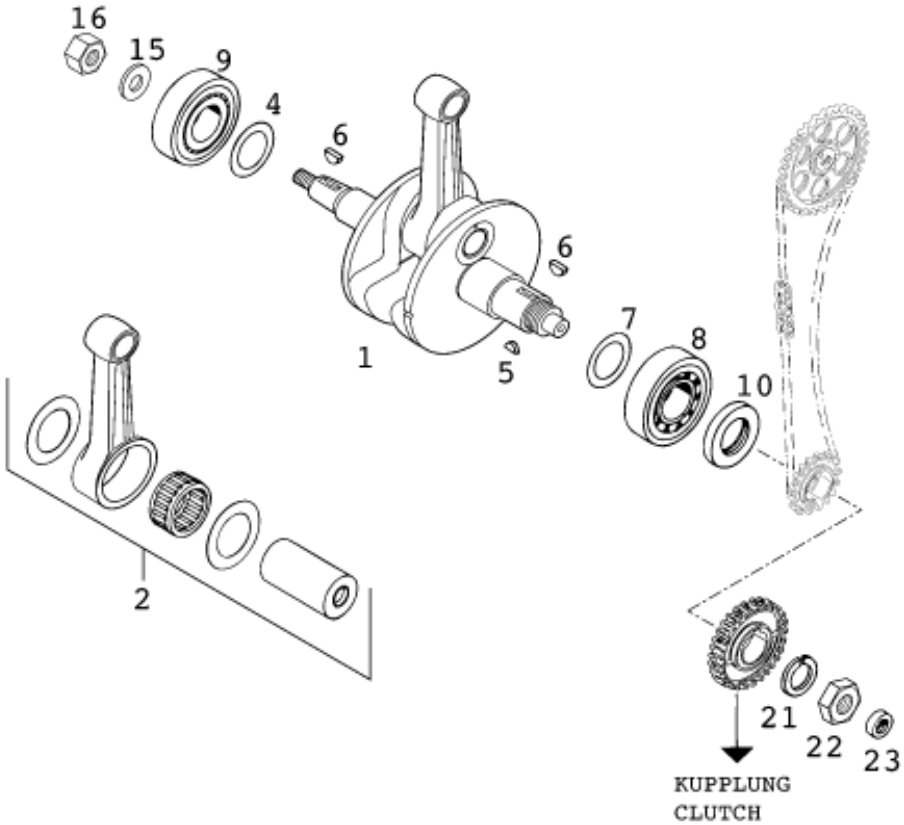

Pos	Part Number	Description	Additional Text	Quantity
1	57730018100	CRANKSHAFT CPL. 400 LC4-E '97	STROKE 64MM	1.00
1	58430018100	CRANKSHAFT CPL. 640 LC4-E '	STROKE 78MM	1.00
2	58030015044	CONNECTING ROD REPAIR SET LC4	350/400/500/612 CCM L=140MM	1.00
2	58330015044	CONNECTING ROD REPAIR SET LC	620/640 CCM L=141,5MM	1.00
4	56530081000	SHIM WASHER 36X48X0,10		0.00
4	56530081100	SHIM WASHER 36X48X0,15		0.00
4	56530081300	SHIM WASHER 36X48X0,30		0.00
5	0888030050	WOODRUFF KEY DIN6888-3X5X13		1.00
6	6946005	WOODRUFF KEY 5X6,5 HARDED		2.00
7	56030081000	THRUST WASHER 30,5X45X0,10		0.00
7	56030081100	THRUST WASHER 30,7X47X0,15		0.00
7	56030081200	THRUST WASHER 30,5X45X0,30		0.00

8	58030082000	CYL.ROLLER BEARING NJ 306 C3		1.00
9	56530123000	CYL.ROLLER BEAR. NJ 207 ECP C3		1.00
10	0760304771	SHAFT SEAL RING 30X47X7 BSL		1.00
15	58330095000	STEEL WASHER 16 X 30 X 3		1.00
16	58430028000	HEX NUT M16x1,25 L/S		1.00
21	58030019000	LOCKING RING VSK 20		1.00
22	0936200155	HEXAGON NUT DIN0936-M20X1,5		1.00
23	0760122270	SHAFT SEAL RING 12 X 22 X 7 B		1.00
31	57530031000	OIL SCRAPER RING 89MM		1.00
32	57530132000	TAPERED COMPR.PISTON RING 89MM		1.00
33	57530032000	RECTANGULAR RING 89MM		1.00
36	57730007000 I	PISTON I 89MM CPL. CAST '99		1.00
36	57730007000 II	PISTON II 89MM CPL. CAST '99		1.00
37	57730033000	* PISTON BOLT 22X13X54,2 '		1.00
40*	58330007500 I	PISTON I 101MM CPL. CAST 20		1.00
40*	58330007500 II	PISTON II 101MM CPL. CAST 20		1.00
41	58330031300	OIL SCRAPER RING 101x2,5		1.00
42	58330932100	TAP.COMPR.PISTON RING 101X1,25		1.00
43	58330832000	RECTANGULAR RING 101x1,25		1.00
44	58330833000	PISTON PIN 22 X 13 X 60		1.00
45	58030074100	CIRCLIP C 22 X 1,5		2.00
46*	58430007000 I	PISTON I CPL.101MM FORGED 20		1.00
46*	58430007000 II	PISTON II 101MM FORGED 20		1.00
47*	58430074000	CIRCLIP 22 X 1,6		2.00
48*	58430032000	L-RING 101X93,5X1,5 2000		1.00

* = New part