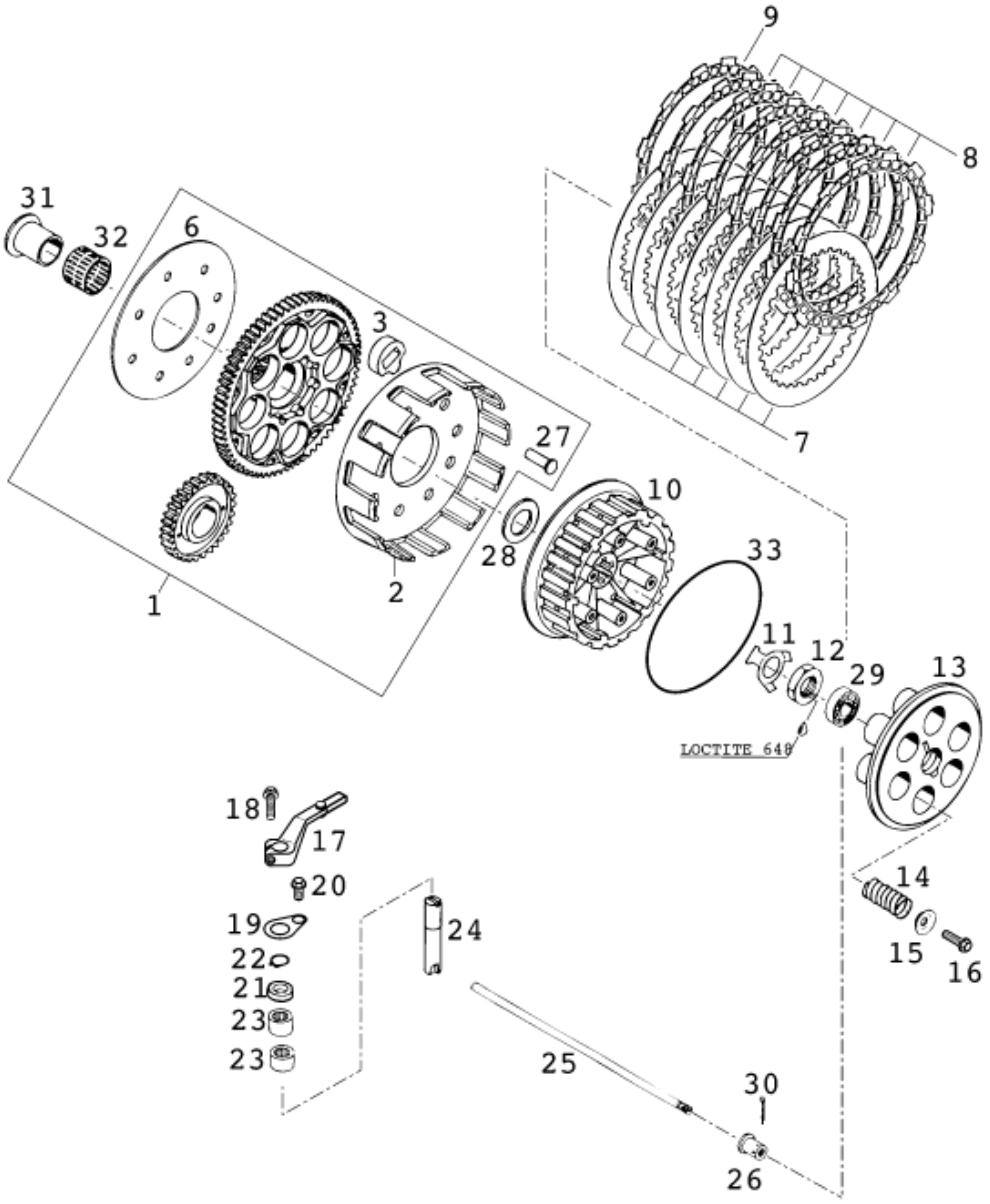

Pos	Part Number	Description	Additional Text	Quantity
1	58332001081	OUTER CL.HUB 81-T W.PRIM.30		1.00
2	58332001000	OUTER CL.HUB LOOSE D=160MM '		1.00
3	58332026000	DAMPING ELEMENT '94		8.00
6	58332028000	BRACKET 57 x 132 x 1,5 '94		1.00
7	58332112000	STEEL DISK 1,5 MM LC4'94		7.00
8	58332011100	LINING DISK 2,7 MM EN-622 '		7.00
9	58332111000	LINING DISK 2,7 MM SPECIAL		1.00
10	58332002200	INNER CL HUB LC4/LC4-E '98		1.00
11	58332018000	LOCK WASHER '94		1.00
12	0936181505	HEXAGON NUT DIN0936-M18X1,5 R.		1.00
13	58332003200	PRESSURE CAP LC4/LC4-E '98		1.00
14	58332080000	CLUTCH SPRING 2,8 X 37		6.00
15	58132081000	SPRING RETAINER 6,2 X 20 X 3,2	400	6.00
16	0015060203	HH COLLAR SCREW M 6X20 WS=8		6.00
17	58432048000	CLUTCH RELEASE LEVER LC4-E '		1.00

18	0015060203	HH COLLAR SCREW M 6X20 WS=8		1.00
19	58432044000	*RETAIN.PLATE CLU.RELEASELEVER		1.00
20	0015060123	HH COLLAR SCREW M 6X12 WS=8		1.00
21	54532093000	NUT RING NIS 12X20X5,5		1.00
22	0471120010	retaining ring DIN 471 12x1		1.00
23	50332095000	NEEDLE BEARING HK 1212		2.00
24	57532015000	DISENGAGING SHAFT 12 X 66 '93		1.00
25	58332017000	PUSH ROD 224 MM LC4'94		1.00
26	58332032000	PRESSURE BOLT LC4'94		1.00
27	58332007000	RIVET 6 X 23 X 11,2		8.00
28	57532013000	SUPPORTWASHER 22,2X35X3 HARDE.		1.00
29	0625060016	deep groove ball bearing 6001.		1.00
30	0094020163	PIN DIN0094-2,0X16		1.00
31	50332070000	INNER RING WITH COLLAR		1.00
32	56532095000	NEEDLE BEARING K26X30X22ZW.KSE		1.00
33	0770116030	O-RING 116,00X3,00 HNBR 70		1.00