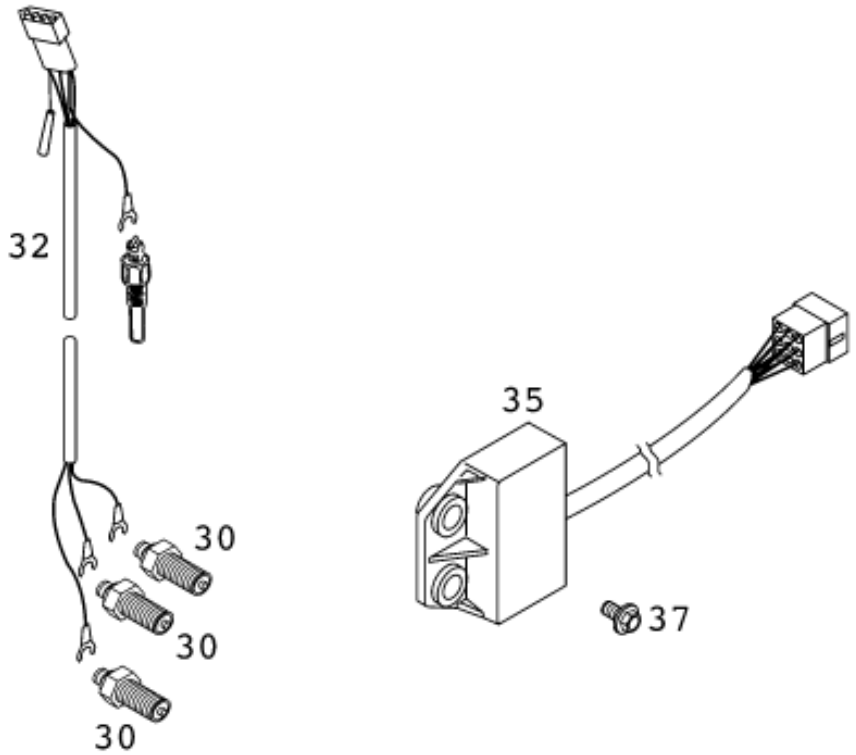

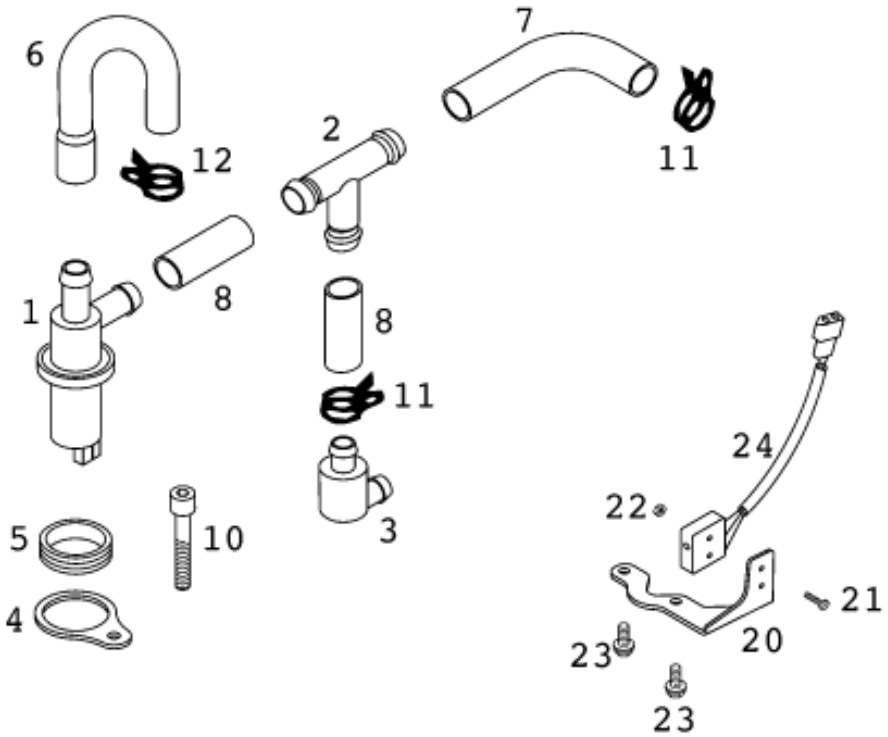

Pos	Part Number	Description	Additional Text	Quantity
1	58431067000	MAGNETIC VALVE PIRBURG EPC '98		1.00
2	58431072000	T-CONNECTION 12MM LC4 '98		1.00
3	58431070000	AIR FILTER LC4 '98		1.00
4	58431069000	BRACKET FOR MAGNETIC VALVE '98		1.00
5	54635022000	SLEEVE FOR STEERING HEAD		1.00

6	58431071000	VACUUM HOSE FOR MAGNETIC V.'98		1.00
7	58431097000	ANGULAR HOSE T-CON.-CARBURETOR		1.00
8	58431097100	TUBE 12MM T-CON.-FILTER '98		2.00
10	0912060404	AH SCREW DIN0912-M 6X40 A2		1.00
11	58431082000	YDNAC-CLAMP 15MM '98		2.00
12	58431082100	YDNAC-clamp 10173 (16MM)		1.00
20	58431080000	BRACKET FOR ENDSWITCH '98		1.00
21	0084020103	CYL.HEAD SCREW DIN0084-M 2X10		2.00
22	0934020003	HH NUT DIN0934-M 2		2.00
23*	0015050123	HH COLLAR SCREW M 5X12 WS=8		2.00
24	58431065100	MICRO SWITCH LC4 '98		1.00
30	58011081100	CONTACT SCREW M10 STEEL '98		3.00
32	58411085000	WIRING HARN. EPC F. ENGINE LC4		1.00
35	58431063000	CONTROL UNIT FOR EPC '98	640 LC4	1.00
37	0014060103	HH COLLAR SCREW M 6X10 WS=8		2.00

* = New part