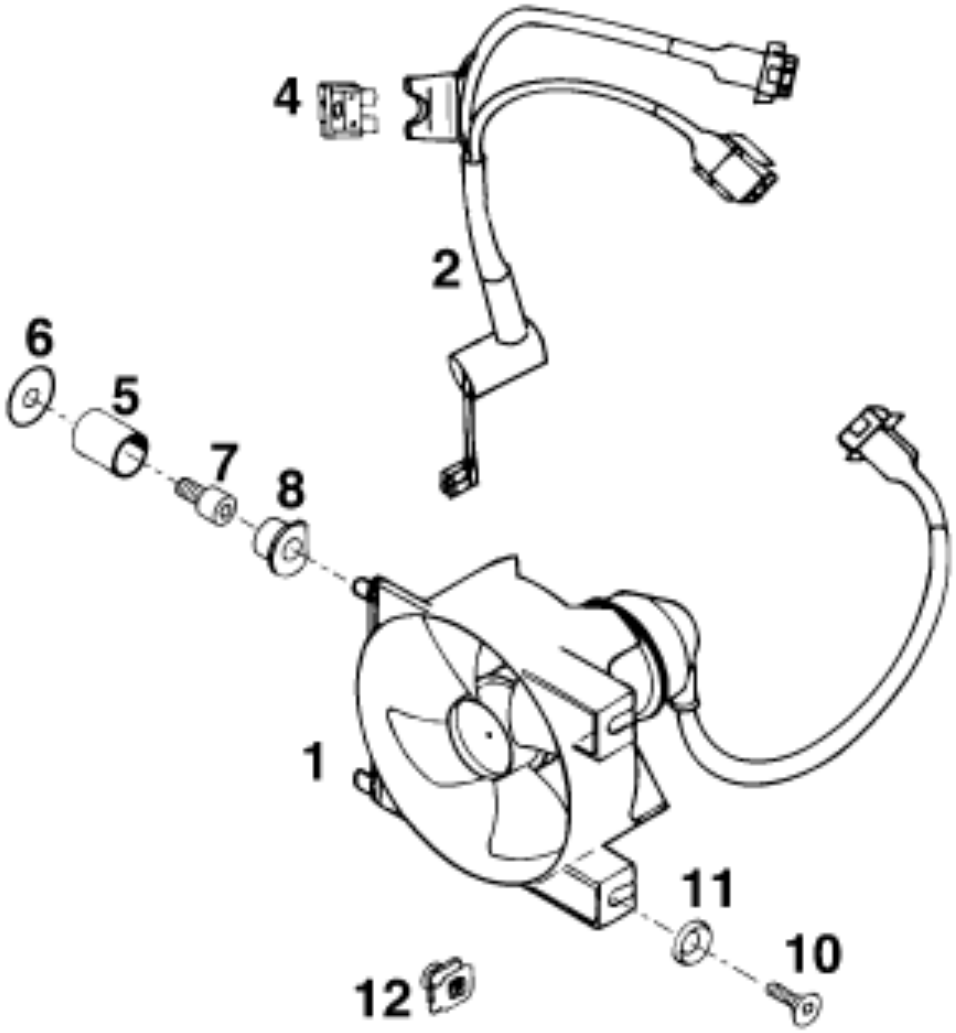

Pos	Part Number	Description	Additional Text	Quantity
1	58335041044	FAN CPL. WITH CASE		1.00
2	58311079000	WIRING FOR FAN '94		1.00
4	58011109005	FUSE 5 A		1.00
5	58335043000	FAN SUPPORT 13 X 16 X 20		2.00
6	51006097000	WASHER 6,2X22X1,ST30,W.GALV.		2.00
7	0912060123	AH SCREW DIN0912-M 6X12		2.00
8	44106018000	PLASTIC CAP		2.00
10	0991060163	FLAT HEAD SCR. DIN7991-M 6X16		2.00
11	40006006000	WASHER 6MM		2.00
12	50235033300	SNAP-NUT HOLDER M6 KP142		2.00