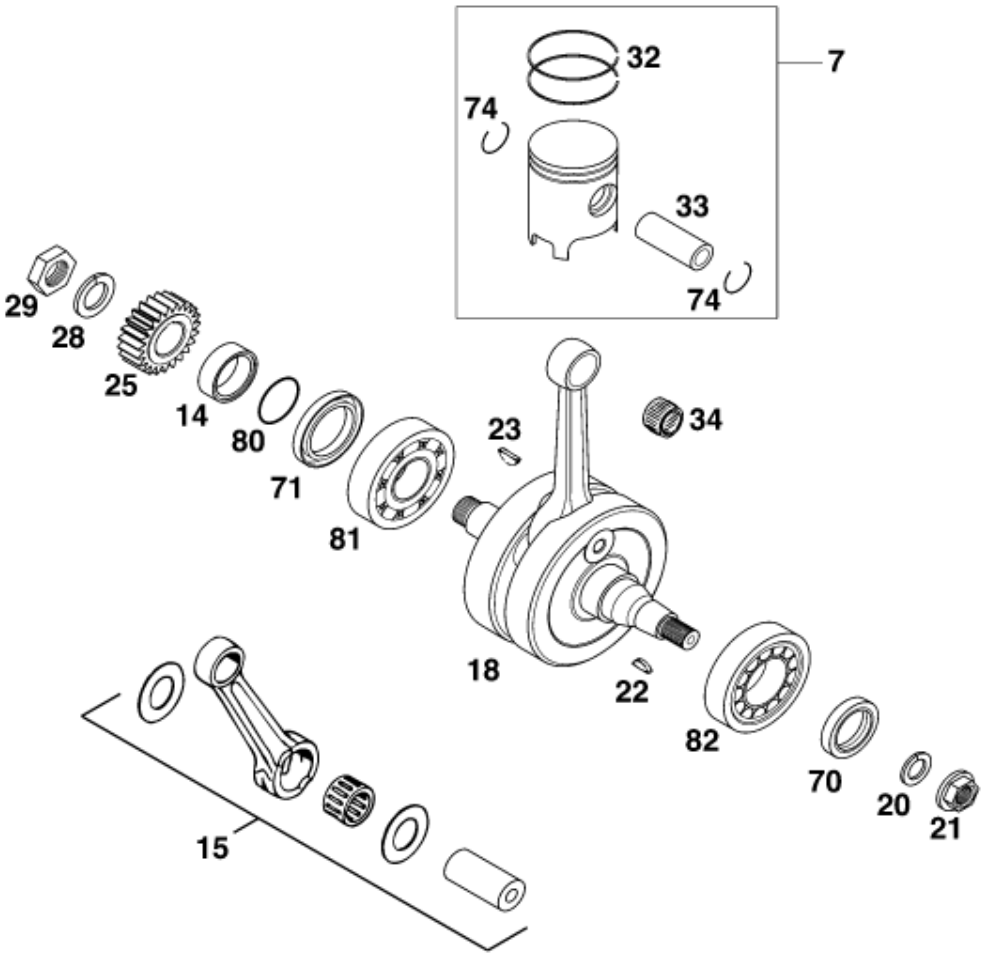

Pos	Part Number	Description	Additional Text	Quantity
7	50330007100 I	PISTON I CPL. 54,25MM 125'99		1.00
7	50330007100 II	PISTON II CPL. 54,25MM 125'9		1.00
7	50330007200 I	PISTON I CPL. 54,25MM 125'99		1.00
7	50330007200 II	PISTON II CPL. 54,25MM 125'99		1.00
7	52330007000 I	PISTON I CPL. 64MM 200'		1.00
7	52330007000 II	PISTON II CPL. 64MM 200'		1.00
14	54633014100	SPACER BUSHING 12MM	ONLY FOR 640 DUKE	1.00
15	50330015000	CON.ROD REPAIR KIT 125'98		1.00
15	52330015000	CON.ROD REPAIR KIT 200'98		1.00
18	50330018000	CRANKSHAFT STROKE 54 125'98		1.00
18	52330018000	CRANKSHAFT 200 MXC/EXC '	STROKE 60	1.00
20	50230029012	LOCKING RING VSK 12		1.00
21	49030021000	COLLAR NUT M12X1 R/S		1.00
22	0888030050	WOODRUFF KEY DIN6888-3X5X13		1.00
23	6946005	WOODRUFF KEY 5X6,5 HARDED		1.00
25	50332023023	PRIM. PINION 23-T 125/200'98		1.00
28	50230029016	LOCKING RING VSK 16		1.00
29	50330029000	HEXAGON NUT M 16 X 1,5 - L/S		1.00
32	50230032500	SQUARE RING 54,25X1 125'92		0.00
32	52330032000	SQUARE RING 64X1 200'98		2.00
33	50130033000	PISTON PIN 9X15X46,3 125'93		1.00
33	52330033000	PISTON PIN 10X16X46 200'		1.00

34	51030034000	NEEDLE BEARING KBK 15X19X20	125	1.00
34	52330034000	NEEDLE BEARING KV16X20X20 FN	200	1.00
70	0760253570	SHAFT SEAL RING 25X35X7 BTSL		1.00
71	0760324564	SHAFT SEAL RING 32X45X6,5 BT		1.00
74	52030074000	WIRE LOCK RING C15X1,2		2.00
74	52330074000	WIRE LOCK RING C16X1,2		2.00
80	0770250020	O-RING 25,00X2,00 NBR 70		1.00
81	0625063054	BALL BEARING NSK 6305 C4E		1.00
82	50330082000	CYL.ROLLER BEAR.NJ206 ET2XCS46		1.00