ACHTUNG !!!
Vor dem Einbau des Vergasers, Bedüsung ko
CAUTION !!!
Before mounting the carburetor, check t

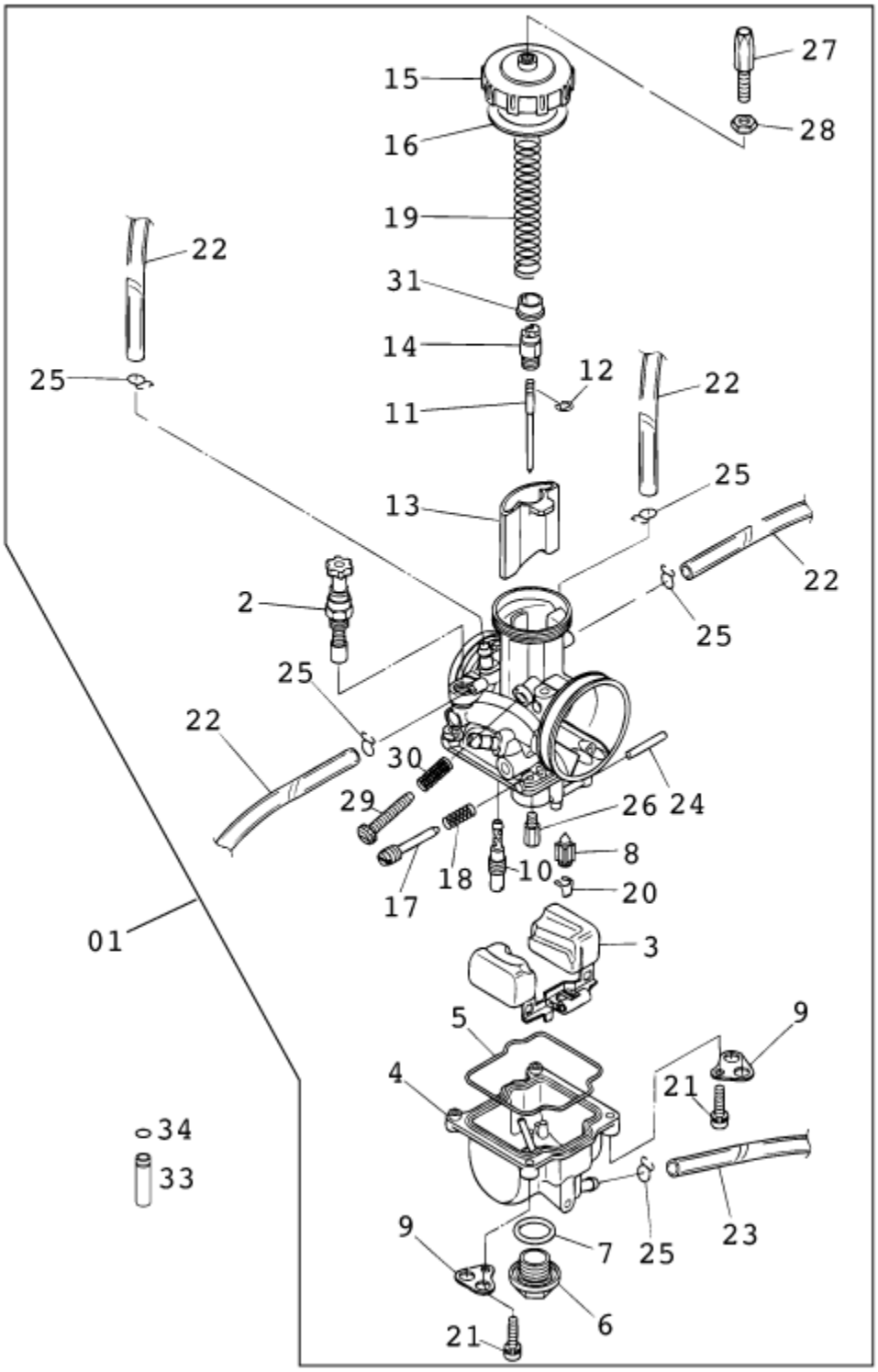

Pos	Part Number	Description	Additional Text	Quantity
1	50331001344	CARBURET.KEIHIN PWK 38 AG 20		1.00
2	54631245000	STARTER PISTON CPL.		1.00
3	54631209000	FLOAT R-39 16GRAM		1.00

4	54631211000	FLOAT CHAMBER		1.00
5	54531610000	GASKET FLOAT CHAMBER		1.00
6	54531699000	PLUG M 18X1		1.00
7	0770180230	O-RING 18,00X2,30 NBR 70		1.00
8	54631220000	FLOAT NEEDLE		1.00
9	54531612100	RETAINING PLATE FOR BLEEDER		2.00
10	54531607035	IDLE JET 35 KEIHIN	125/200 EXC	1.00
10	54531607038	IDLE JET 38 KEIHIN	450-650 FE+FS	0.00
10	54531607040	IDLE JET 40 KEIHIN	450 SMR	0.00
10	54531607042	IDLE JET 42 KEIHIN	525 SMR	0.00
10	54531607045	IDLE JET 45 KEIHIN	200 MXC/EXC-USA	1.00
10	54531607048	IDLE JET 48 KEIHIN	125 SX	1.00
10	54531607050	IDLE JET 50 KEIHIN		0.00
10	54531607052	IDLE JET 52 KEIHIN		0.00
10	54531607055	IDLE JET 55 KEIHIN		0.00
10	54531607058	IDLE JET 58 KEIHIN		0.00
10	54531607060	IDLE JET 60 KEIHIN		0.00
10	54531607062	IDLE JET 62 KEIHIN		0.00
10	54531607065	IDLE JET 65 KEIHIN		0.00
10	54531607070	IDLE JET 70 KEIHIN		0.00
10	54531607075	IDLE JET 75 KEIHIN		0.00
10	54531607080	IDLE JET 80 KEIHIN		0.00
11	54531634175	JET NEEDLE R 1475 J KEIHIN	200 EXC-EU/AUS	1.00
11	54531634272	JET NEEDLE R 1472 N KEIHIN	125 EXC	1.00
11	54531634367	JET NEEDLE R 1467 D KEIHIN		0.00
11	54531634368	JET NEEDLE R 1468 D KEIHIN		0.00
11	54531634369	JET NEEDLE R 1469 D KEIHIN	125 SX	1.00
11*	54531634370	JET NEEDLE R 1470 D KEIHIN		0.00
11	54531636004	JET NEEDLE NOZ D KEIHIN		0.00
11	54531636005	JET NEEDLE NOZ E KEIHIN	200 MXC, EXC USA	0.00
11	54531636006	JET NEEDLE NOZ F KEIHIN	200 MXC/EXC-USA	0.00
11	54531636007	JET NEEDLE NOZ G KEIHIN	SX	1.00
11	54531636008	JET NEEDLE NOZ H KEIHIN	300 MXC, EXC USA	0.00
11	54531636009	JET NEEDLE NOZ I KEIHIN		0.00
12	54531629000	CLIP FOR JET NEEDLE		1.00
13	54631235055	THROTTLE VALVE 55 KEIHIN	125 SX	1.00
13*	54631235106	THROTTLE VALVE 65 KEIHIN	125/200 MXC/EXC	1.00
14	54631232000	NIPPLE		1.00
15	54631227000	CARBURETOR COVER		1.00
16	54531628000	RUBBER SEAL RING 40X46X1		1.00
17	54531617000	ADJUSTMENT SCREW		1.00
18	54531615000	SPRING FOR ADJUSTMENT SCREW		1.00
19	54631230000	SLIDING SPRING		1.00
20	54531621000	CLAMP		1.00
21	0016040163	HH COLLAR SCREW M 4X16 WS=6		4.00
22	31007007101	PVC-HOSE 4X6MM		2.00
23	52031137001	PVC-HOSE 3X5MM		0.00
24	54531608000	STUD 2,5X25		1.00
25	54531696000	Clamp 6mm		0.00
26	54531623142	MAIN JET 142 KEIHIN		0.00
26	54531623148	MAIN JET 148 KEIHIN	125 EXC-EU/AUS	1.00

26	54531623150	MAIN JET 150 KEIHIN		0.00
26	54531623158	MAIN JET 158 KEIHIN		0.00
26	54531623160	MAIN JET 160 KEIHIN	MXC, EXC	0.00
26	54531623165	MAIN JET 165 KEIHIN	SX	0.00
26	54531623170	MAIN JET 170 KEIHIN		0.00
26	54531623172	MAIN JET 172 KEIHIN		0.00
26	54531623175	MAIN JET 175 KEIHIN	250 EXC EU+AUS, 300 MXC, EXC	0.00
26	54531623178	MAIN JET 178 KEIHIN	200 MXC/EXC-USA	0.00
26	54531623180	MAIN JET 180 KEIHIN	200 EXC-EU/AUS	1.00
26	54531623182	MAIN JET 182 KEIHIN	250 EXC USA	0.00
26	54531623185	MAIN JET 185 KEIHIN	125 SX	1.00
26	54531623188	MAIN JET 188 KEIHIN	125/200 SX	0.00
26	54531623190	MAIN JET 190 KEIHIN	200 SX	0.00
26	54531623192	MAIN JET 192 KEIHIN		0.00
26	54531623195	MAIN JET 195 KEIHIN		0.00
27	54531625000	ADJUSTMENT SCREW M 6X0,75		1.00
28	52031126000	HEXAGON NUT M 6X0,75 DIN0439		1.00
29	54631219100	ADJUSTMENT SCREW M 5		1.00
30	54631118000	SPRING		1.00
31	54631231000	SPRING CAP		1.00
33	50331029036	SLIDE STOP L=36MM	380 EXC AUS	0.00
34	0770060018	O-RING 6,07X1,78 FPM75		0.00

* = New part