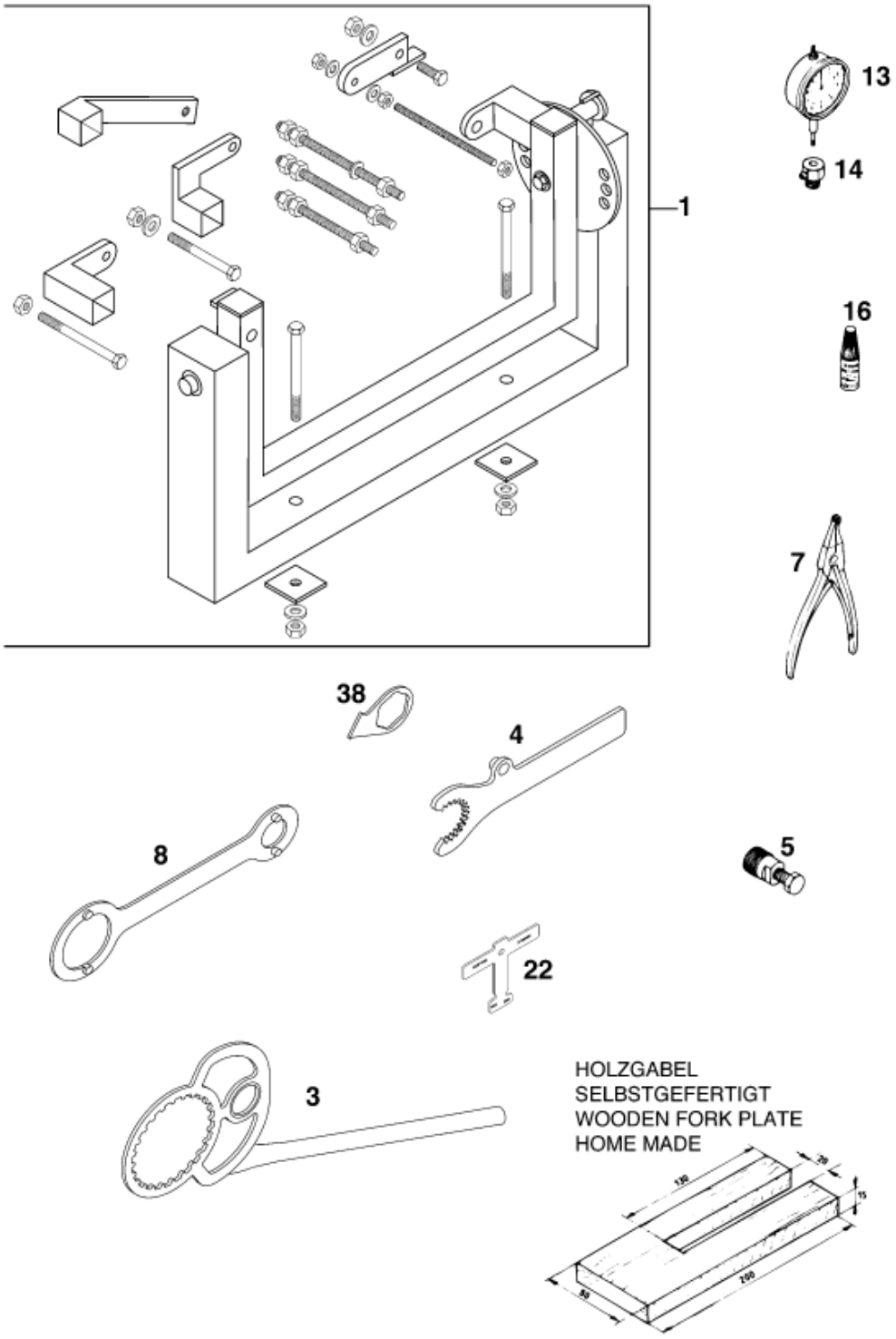

Pos	Part Number	Description	Additional Text	Quantity
1	56012001000	ASSY SUPPORT (WITHOUT HOLDER)		1.00
3	50329003000	HOLD. PLATE CLUTCH 125/200 '98		1.00
4	50329004000	HOLDER FOR PRIMARY GEAR '98		1.00
5	54629009044	MAGNETIC PULLER M 27X1 KOKUSAN		1.00
7	51012011000	SPECIAL CIRCLIP PLIER		1.00
8	54629012100	HOLD SPANNER ROTOR 2K-1/2/3/4		1.00
13	50112013000	DIAL GAUGE 0-10MM		1.00
14	50112030000	DIAL GAUGE SUPPORT		1.00
16	6899785	LOCTITE 243 BLUE 5 ML		1.00

22	50329022000	SHEEET METAL CONTROL FLAP '98		1.00
38	50329038000	BRACKET FOR LOCATING DRUM '98		1.00