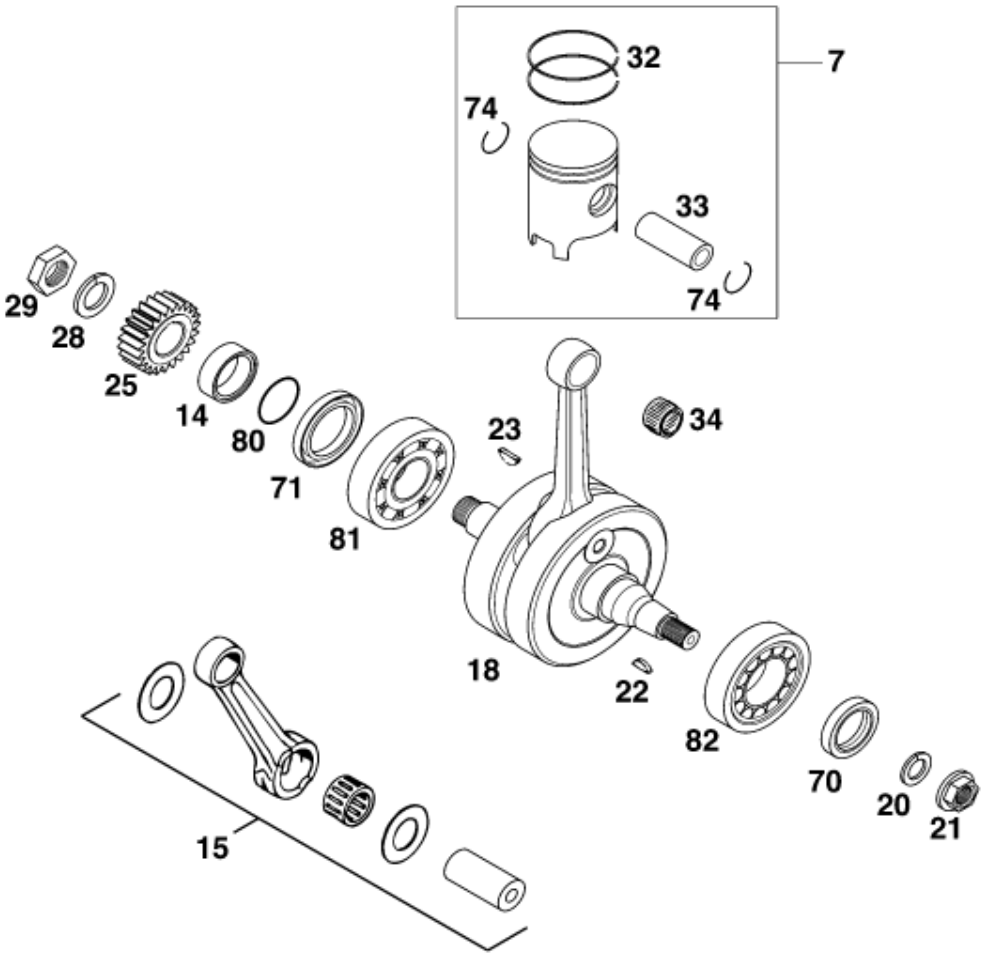

Pos	Part Number	Description	Additional Text	Quantity
7*	50330007400 I	PISTON I CPL. 54MM 125 '00	TWO RINGS, CAST	1.00
7*	50330007400 II	PISTON II CPL. 54MM 125 '00	TWO RINGS, CAST	1.00
14	54633014100	SPACER BUSHING 12MM	ONLY FOR 640 DUKE	1.00
15	50330015000	CON.ROD REPAIR KIT 125'98		1.00
18*	50330018100	CRANKSHAFT 125 EXE/EXC 2001	STROKE 54,5	1.00
20	50230029012	LOCKING RING VSK 12		1.00
21	49030021000	COLLAR NUT M12X1 R/S		1.00
22	0888030050	WOODRUFF KEY DIN6888-3X5X13		1.00
23	6946005	WOODRUFF KEY 5X6,5 HARDED		1.00
25	50332023023	PRIM. PINION 23-T 125/200'98		1.00
28	50230029016	LOCKING RING VSK 16		1.00
29	50330029000	HEXAGON NUT M 16 X 1,5 - L/S		1.00
32*	50330032500	SQUARE RING 54X1 125 2001		2.00
33*	50330033500	PISTON PIN 15X45,2 125 2001		1.00
34	51030034000	NEEDLE BEARING KBK 15X19X20	125	1.00
70	0760253570	SHAFT SEAL RING 25X35X7 BTSL		1.00
71	0760324564	SHAFT SEAL RING 32X45X6,5 BT		1.00
74*	50330074500	WIRE LOCK RING 15X1	125	2.00
80	0770250020	O-RING 25,00X2,00 NBR 70		1.00
81*	0625063055	BALL BEARING 6305 JR2 CS36		1.00
82	50330082000	CYL.ROLLER BEAR.NJ206 ET2XCS46		1.00

* = New part