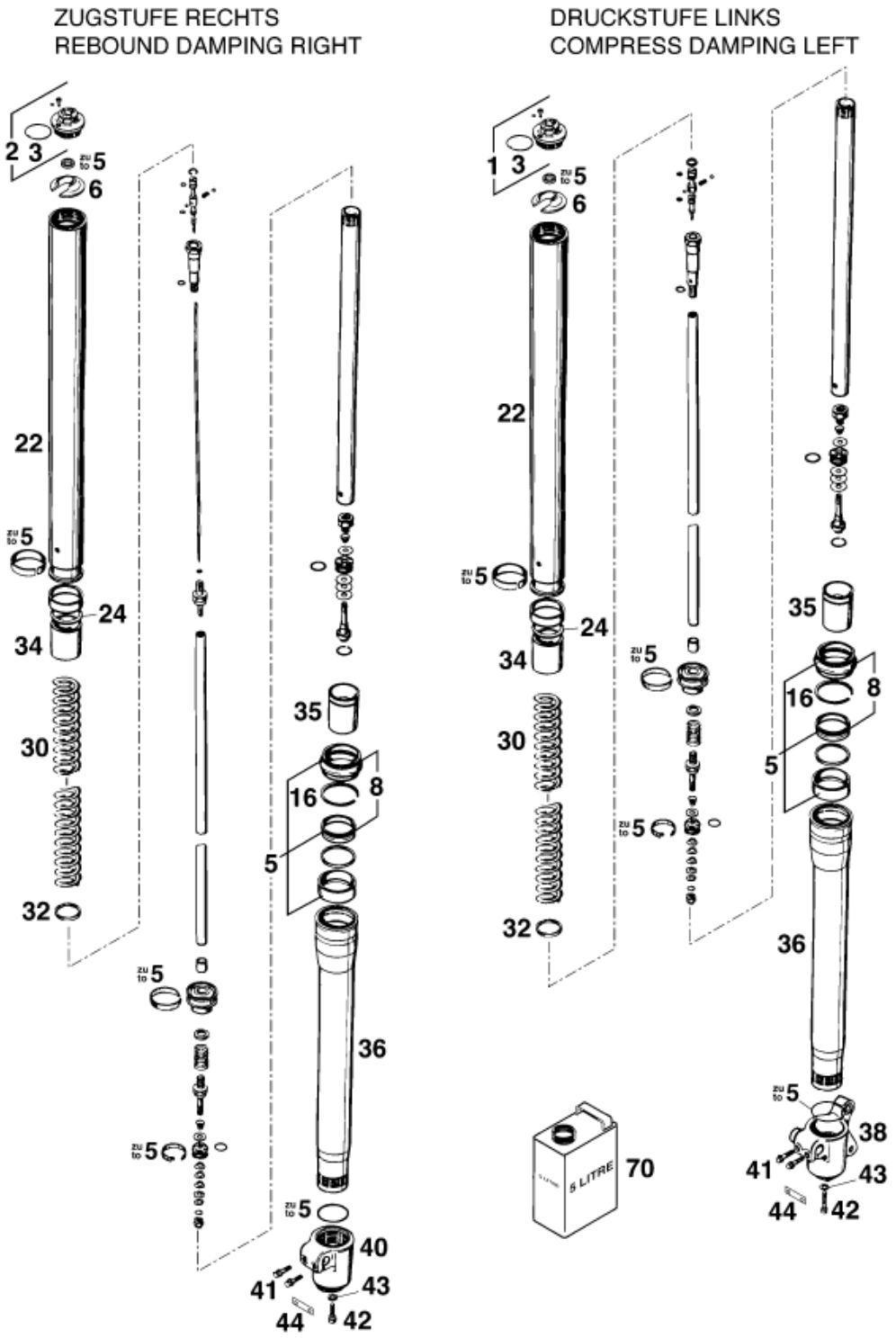

Pos	Part Number	Description	Additional Text	Quantity
1	58301408000	* SCREW CAP CPL.COMPRESS DAMPI		1.00
2	58301409000	SCREW CAP CPL. REBOUND DAMPI		1.00
3	0770400020	O-RING 40,00X2,00 FPM 75		2.00
5	58301414000	% GASKET SET WITH SLIDING BUSH		2.00
6	58301423000	SPRING RETAINER WITH SLOT		2.00
8	58301415000	REPAIR KIT SHAFT SEAL RINGS		2.00
16	58301429000	% CIRCLIP D=50MM		2.00
22	54701003000	% FORK TUBE D=50MM/L=668MM '		2.00
24	58301419000	WASHER 32X45X2		2.00

30	54701021038	* SPRING 3,8 N/MM SET		0.00
30	54701021040	SPRING 4,0 N/MM SET		2.00
30	54701021042	% SPRING 4,2 N/MM SET		2.00
30	54701021044	* SPRING 4,4 N/MM SET		0.00
32	54701016000	RING 35X41,5X2,5		2.00
34	54701022000	BUSHING 44,5X35X80		2.00
35	54701018000	% SLIDING BUSH HYDRO-STOP L=73		2.00
36	54701004000	% OUTER TUBE L=439MM		2.00
38	54701006000	% AXLE CLAMP L/S EXTREME M8 '		1.00
40	54701007000	% AXLE CLAMP R/S EXTREME M8 '		1.00
41	0015080253	HH COLLAR SCREW M 8X25 WS=10		4.00
42	0015080203	HH COLLAR SCREW M 8X20 WS=10		2.00
43	54501081000	SEAL RING 8X12X1,5		2.00
44	58301006050	* CLAMPING PLATE 13,5X42,5		2.00
70	306007	FORK OIL SAE5 5 LITER		1.00