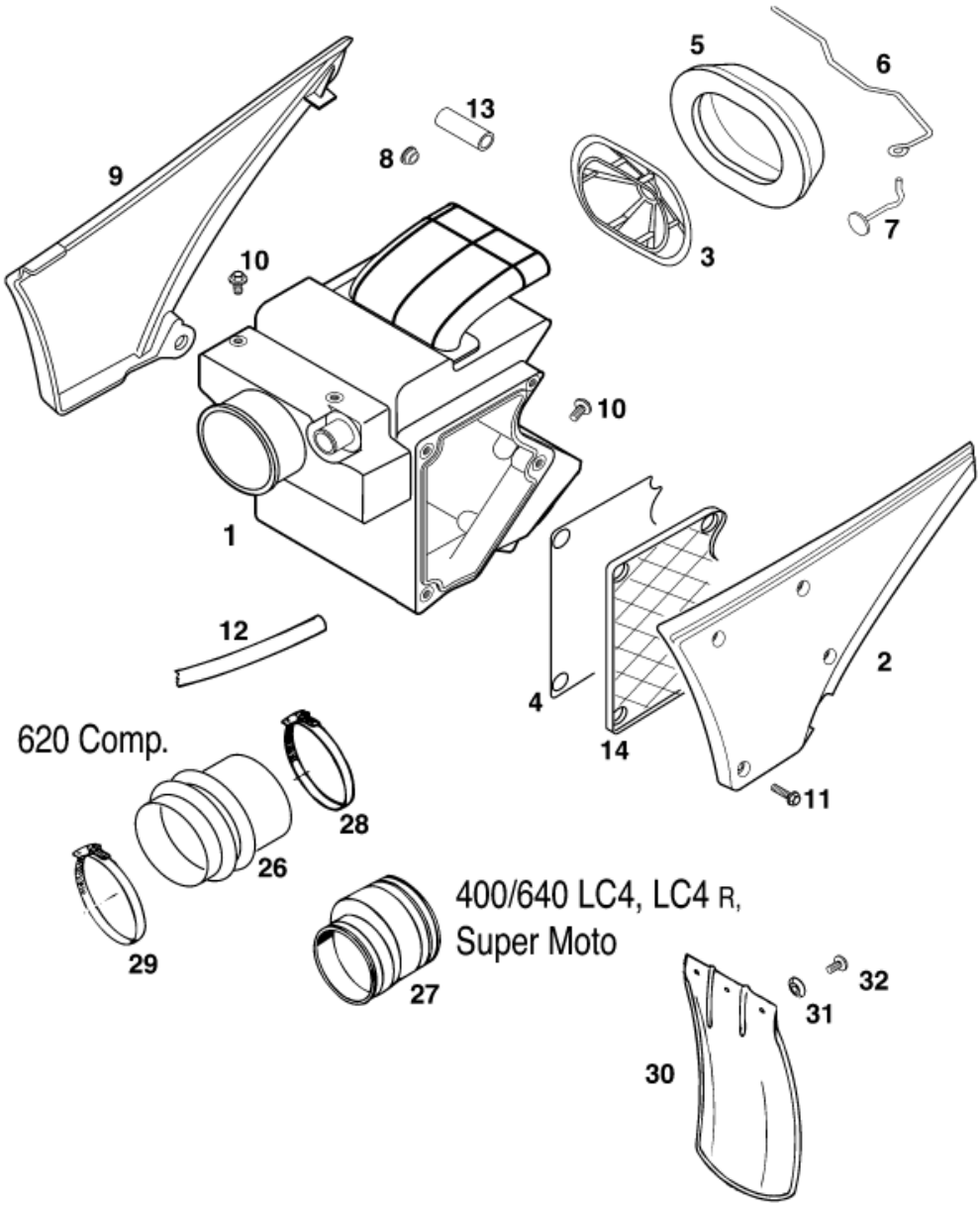

Pos	Part Number	Description	Additional Text	Quantity
1	58406001100	FILTER BOX	FOR SLS, CONNECTION REBORE	1.00
2	58406003100	FILTER BOX COVER L/S LC4'98		1.00
3	58406016000	FILTER CARRIER '97		1.00
4	58406090100	GASKET FILTER BOX COVER LC4'98		1.00
5	58406015100	AIR FILTER		1.00
6	58406017100	HOLDING HANGER FOR FILTER '98		1.00
7	58406017050	HOOK F.HOLDING HANG.FILTER '97		1.00
8	36111021000	PLUG		1.00
9	58406004000	FILTER BOX COVER R/S LC4'98		1.00
10	0014060103	HH COLLAR SCREW M 6X10 WS=8		4.00
11	0015050203	HH COLLAR SCREW M 5X20 WS=8		4.00
12	57005020001	HOSE 10X14 PER METER	1 METER	0.00
13	57005020001	HOSE 10X14 PER METER	1 METER	0.00
14	58406003150	CARRIER FILTER BOX GASKET '98		1.00
26	58006026500	AIR FILTER BOOT 540/620/640	EU	1.00

27	58406026000	AIR FILTER BOOT 400/640 LC4'97	USA	1.00
28	55006028000	HOSE CLAMP 60-80MM		1.00
29	51006027000	HOSE CLAMP 50-70MM		1.00
30	54606010000	SPLASH PROTECT.FOR FILTER BOX		1.00
31	72210079000	BUCKET		2.00
32	0014060103	HH COLLAR SCREW M 6X10 WS=8		2.00