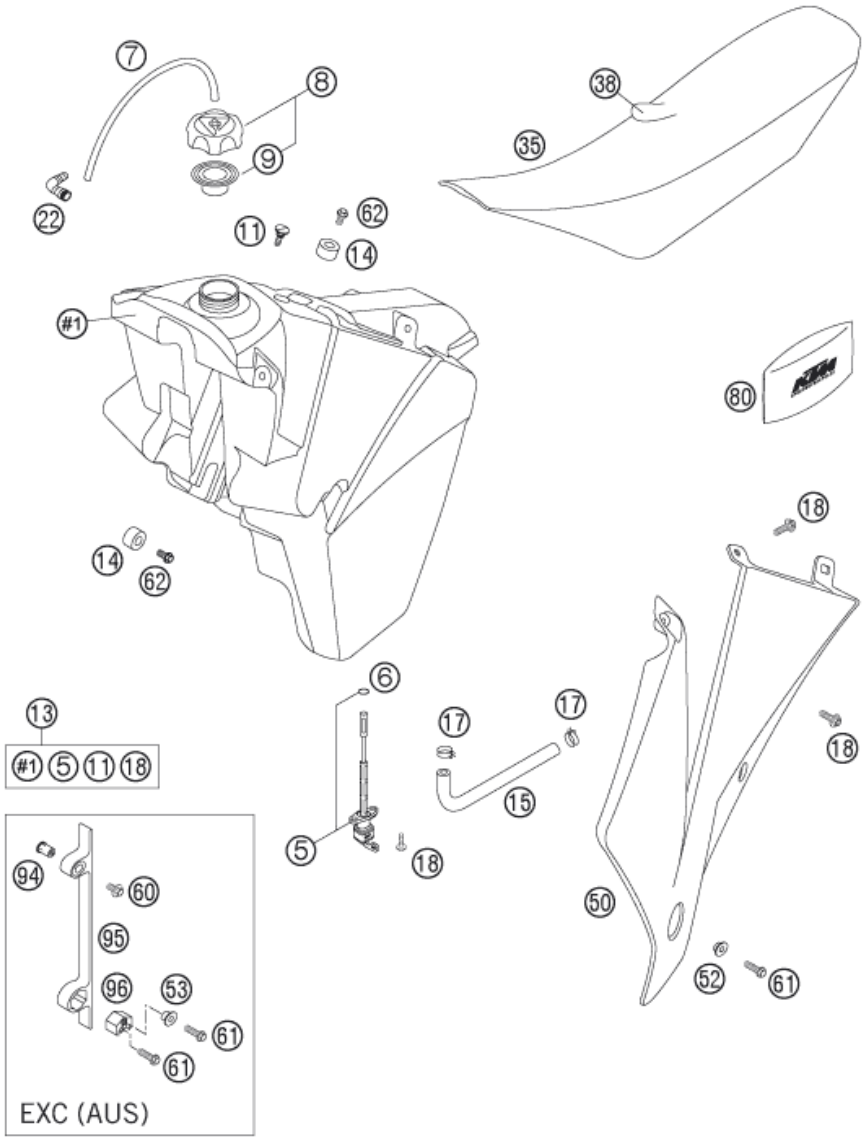

Pos	Part Number	Description	Additional Text	Quantity
5	54807004000	GAS COCK ON/OFF/RES 03	MXC, EXC	1.00
6	0770110021	O-RING 11X2 VITON	FOR EXC+MXC GAS COCK	1.00
7	31007107001	PVC-HOSE 6X9 MM PER METER	BREATHING HOSE	0.30
8	59007008044	FILLER CAP CPL. WITH VALVE		1.00
9	59007009000	GASKET FOR FILLER CAP HIGH		1.00
11	50307011000	SCREW SEAT FASTENING D=6X23/18		1.00
13	5030711310044	FUEL TANK CPL. 11L 03	MXC, EXC USA	1.00
14	50307014000	TANK ROLLER 12X26X12 '98		3.00
15	50307016000	FUEL PREFORMED HOSE SX 2001		1.00
17	58031005000	CLAMP YDNAC 10128 12MM	FOR 12 LITER TANK	2.00
18	0017060203	EJOT PT SCREW K60X20 WS=6	MXC, EXC	10.00
22	51030022000	ANGLE PIECE 90 DEGREE M10X1		1.00
35	54807040400	SEAT BLACK WITHOUT KTM-LOGO 05		1.00
38	54807040450	SEAT COV.BLACK WITHOUT LOGO 05		1.00

50	5480805000004	SPOILER L/S ORANGE 05		1.00
50	5480805100004	SPOILER R/S ORANGE 05		1.00
52	50308052000	BUSH FOR SPOILER 6X11X16X5 MM		2.00
53	50308053000	BUSH FOR SPOILER 6X11X16X7,5		2.00
60	0014060103	HH COLLAR SCREW M 6X10 WS=8		2.00
61	0015060203	HH COLLAR SCREW M 6X20 WS=8		4.00
62	0015060123	HH COLLAR SCREW M 6X12 WS=8		3.00
80	50212100100	ORIGINAL EQUIPMENT TOOL KIT		1.00
94	55003139600	BLIND RIVET NUT M 6X15,5 STEEL		2.00
95	50335095000	SPOILER ADAPTER '98		2.00
96	50335096000	TANK ADAPTER BUSH '98		2.00