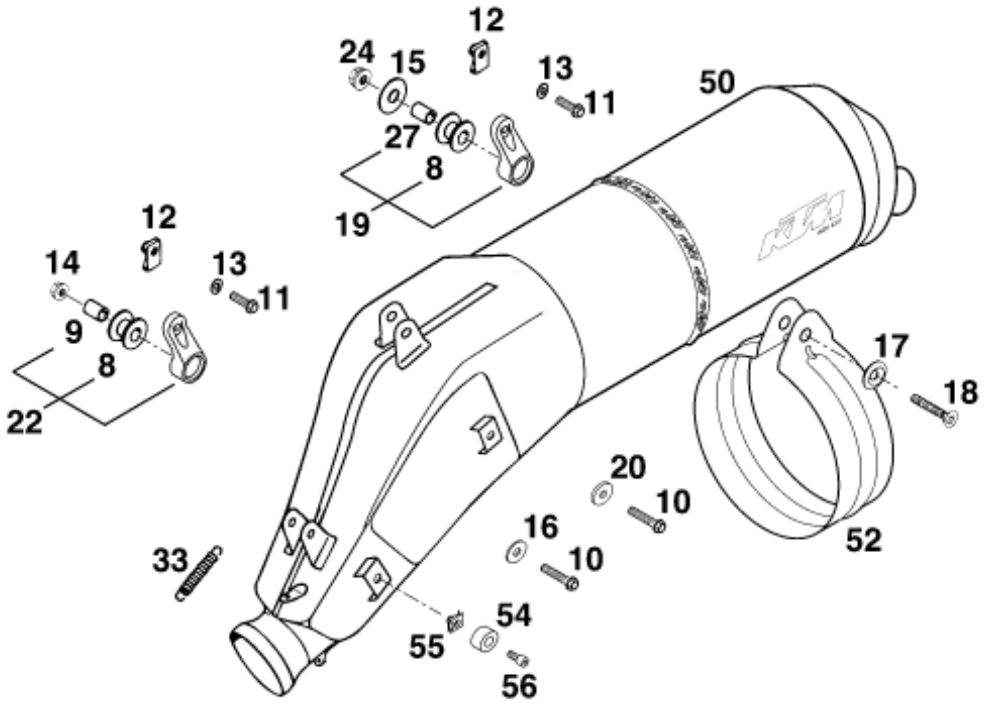

Pos	Part Number	Description	Additional Text	Quantity
8	54305068100	damp. component silicone grey		3.00
9	54305069000	BUSHING 7X12X15,4		2.00
10	0015060303	HH COLLAR SCREW M 6X30 SW=8	LC4, LC4 SM, DUKE	2.00
11	0015060203	HH COLLAR SCREW M 6X20 WS=8		3.00
12	54603048100	clip nut M6		3.00
13	0137060000	SPRING WASHER DIN0137-B 6		3.00
14	56509064000	SELF LOCKING NUT M6		2.00
15	0021080003	WASHER DIN9021-A 8,4		1.00
16	0021060003	Washer DIN9021-A 6.4	ONLY USA	1.00
17	58303061000	SPECIAL WASHER ALU 8 X 24 MM		1.00
18	0991080353	FLAT HEAD SCREW DIN7991-M 8X35		1.00
19	58305165144	SILENCER BRACKET CPL. SHORT		1.00
20	50232050001	STEEL WASHER 6,4X17X3		1.00
22	58305165244	SILENCER BRACKET CPL. SHORT'96		2.00
24	54310086000			1.00
27	56505069000	Spacer bushing 8.4X12X16		1.00
33	50305016000	TEN.SPRING L=62MM EY.MOVEABLE		2.00
50	58305083000	SILENCER "KTM HGS KAT" '97		1.00
50	58305083100	SILENCER "KTM HGS3" '		1.00
52	58305161100	RETAINING CLAMP F. SILENCER'96		1.00
54	58405098000	RUBBERBUFFER 8X17X10 SILENC'97		2.00
55	54603048400	RANGE CHANGE MET. NUT M5 15460		2.00
56	0912050123	AH SCREW DIN0912-M 5X12		2.00