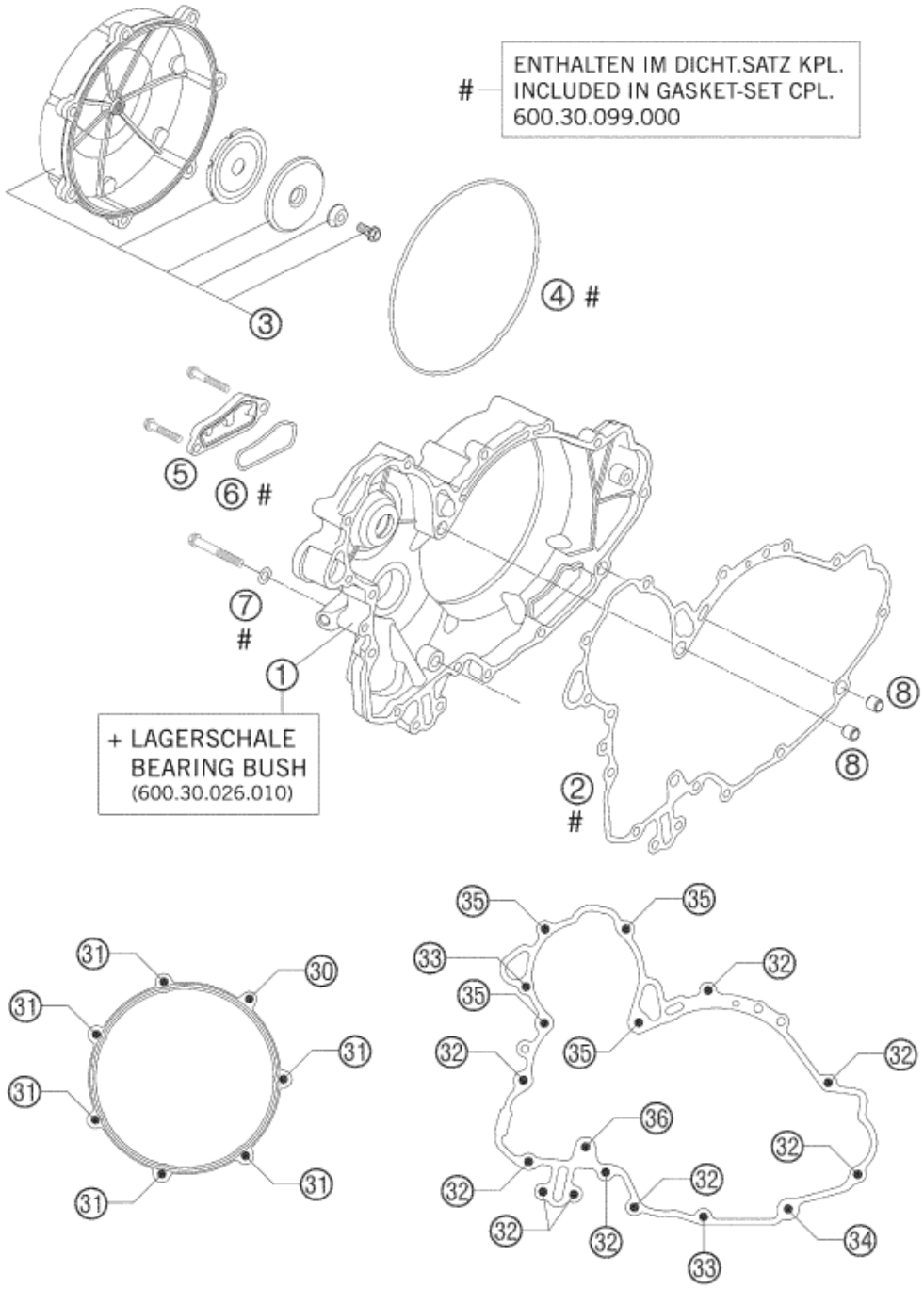

Pos	Part Number	Description	Additional Text	Quantity
1	60030001044	CLUTCH COVER LC8 CPL. 03		1.00
2	60030025000	CLUT.COV. GASK. INSIDE KLI.SIL		1.00
3	60030126144	OUTER CLUTCH COVER CPL. 06		1.00
4	60030027000	GASKET RING CLUTCH 2X3,1 VAMAC		1.00
5	60030012100	CLOS. COVER OIL SCR. MILLED 03		1.00
6	60030012050	MOLDED RING 1,8X2,5 VAMAC 03		1.00
7	0603082131	COPPER Gask.DIN7603- 8.2X13X1		1.00
8	49030090000	DOWEL 9,8 X 7 X 10	FS-E	2.00
30	0015060853	HH COLLAR SCREW M 6X85 WS=8		1.00
31	0015060253	HH COLLAR SCREW M 6X25 WS=8		6.00
32	0015060303	HH COLLAR SCREW M 6X30 SW=8	LC4, LC4 SM, DUKE	9.00

33	0015060353	HH COLLAR SCREW M 6X35 WS=8	LC4 ADVENTURE	2.00
34	0015060403	HH COLLAR SCREW M 6X40 WS=8	450 SMR	1.00
35	0015060603	HH COLLAR SCREW M 6X60 WS=8		4.00
36	0015080603	HH COLLAR SCREW M 8X60 WS=10		1.00