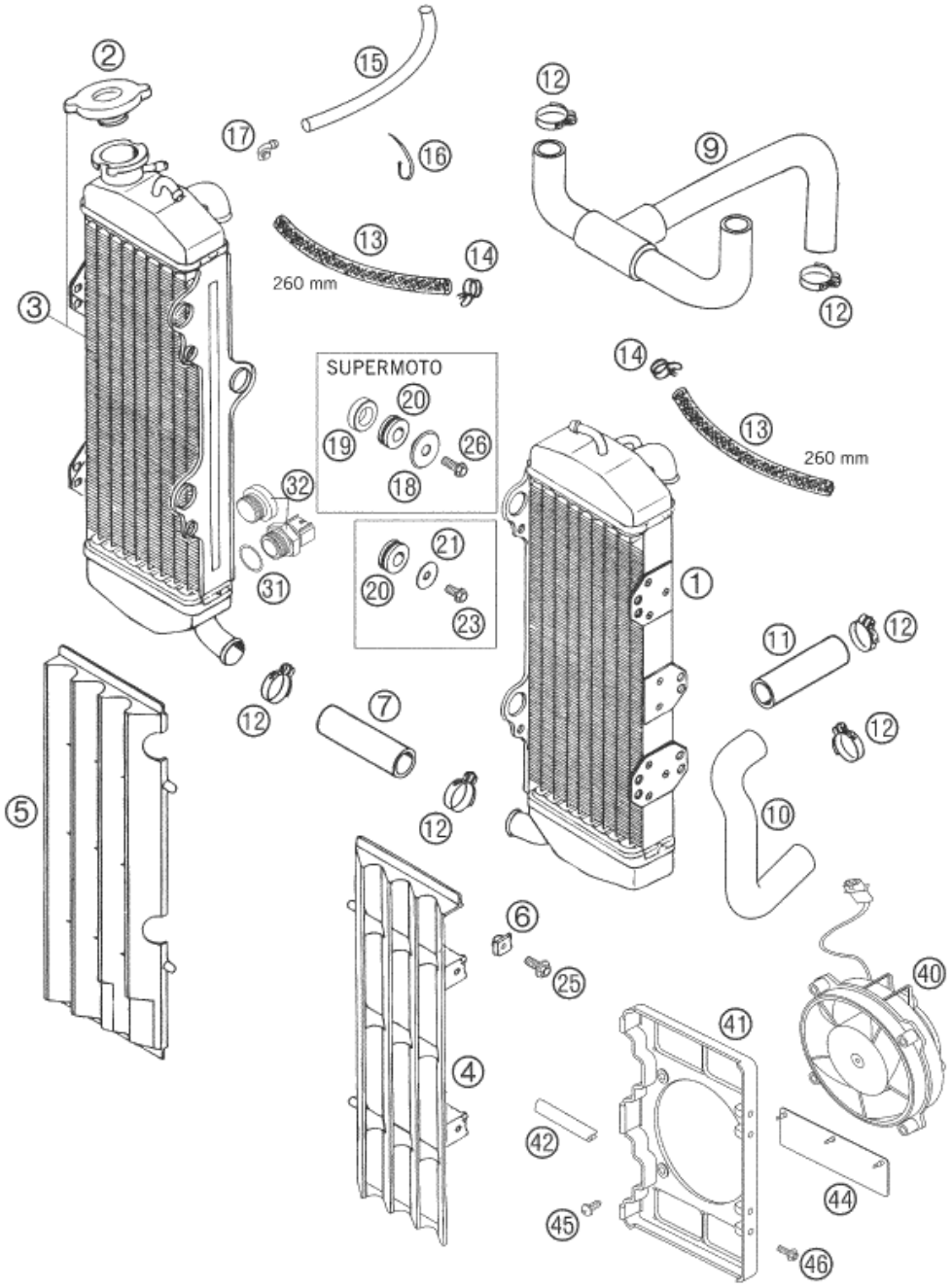

Pos	Part Number	Description	Additional Text	Quantity
1	58335008000	RADIATOR L/S (45246) LC4'94	BLACK	1.00
2	58035016000	RADIATOR CAP SMALL 20,3 PSI		1.00
3	58335008200	RADIATOR R/S (45.403) SXC 03	BLACK	1.00
4	58035034100	RADIATOR PROTECT. L/S WHITE'96		0.00
4	58035034000	RADIATOR PROTECTOR L/S BLACK		1.00
5	58035134100	RADIATOR PROTECT. R/S WHITE'96		0.00
5	58035134000	RADIATOR PROTECTOR R/S BLACK		1.00
6	50235033300	SNAP-NUT HOLDER M6 KP142		4.00
7	56535025001	RADIATOR HOSE 18X25 PER METRE	RADIATOR - RADIATOR	0.10
9	58335026000	PREFORMED HOSE LC4'94	LC4, LC4 SM, DUKE	1.00
10	58435025800	PREFORMED HOSE		1.00
11	58335024001	RADIATOR HOSE 20X26		0.11

12	10001020000	HOSE CLAMP GEMI 18-29		9.00
13	54435024001	HOSE ID 7,5 PER METER	FOR 12 LITER TANK	0.52
14	58031005000	CLAMP YDNAC 10128 12MM	FOR 12 LITER TANK	4.00
15	55007016001	PVC-HOSE 7X10 PER METER		0.22
16	44011076200	Cable tie 200/4.6mm black		0.00
17	50303089000	ANGLE PIECE '97		1.00
18	58435002000	BUSHING F. RADIATOR SUPPORT 03		6.00
19	58435003000	BUSHING F.RADIATOR DISTANCE 03		6.00
20	41001052000	RUBBER SLEEVE D=12MM		6.00
21	0021060003	Washer DIN9021-A 6.4	ONLY USA	6.00
23	0015060123	HH COLLAR SCREW M 6X12 WS=8		6.00
25	0014060153	HH COLLAR SCREW M 6X15 WS=8		4.00
26	0015060163	HH COLLAR SCREW M 6X16 WS=8	FE, FS	6.00
31	0770017015	O-ring 17X1.5		1.00
32	58435045098	THERMOSWITCH 98 °C FOR FAN 03	625/660 SMC, 640 LC4, ADV.	1.00
32	0908180153	PLUG DIN0908-M18X1,5	625 SXC	1.00
40	58435041000	FAN CPL. 12V LC4 2000	300 TPI Erzbergrodeo	1.00
41	58435044000	FAN CAP LC4 2000		1.00
42	58312085100	EDGE PROTECTOR PER METER	0,097 METER	0.22
44	58435044050	FAN FLAP RUBBER LC4 2000		2.00
45	0081500181	SCREW FOR PLASTIC D=5X18		4.00
46	0017060203	EJOT PT SCREW K60X20 WS=6	MXC, EXC	2.00