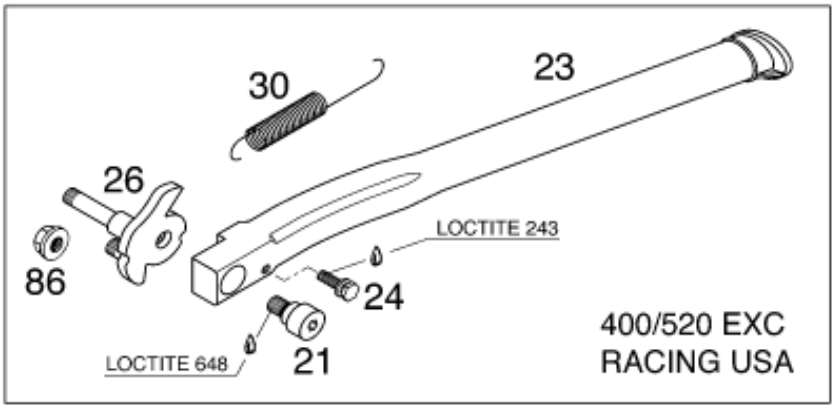

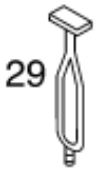

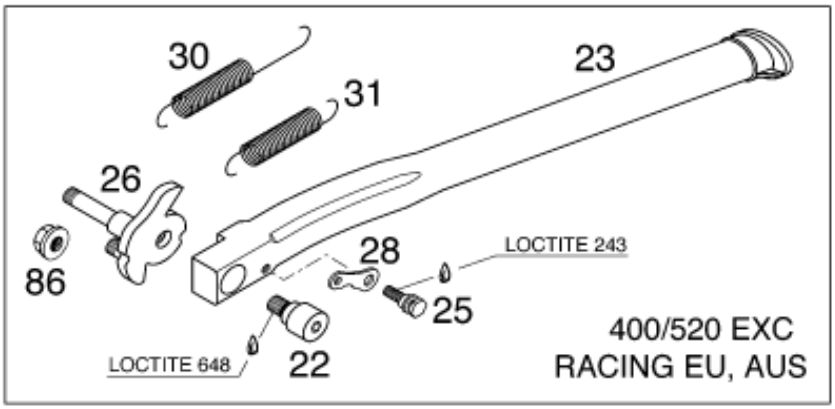

Pos	Part Number	Description	Additional Text	Quantity
22	50303023160	SCREW M8 SIDE STAND EGS '98		1.00
23	50303023000	SIDE STAND L=377MM '98		1.00
25	50303023152	BOLT SIDE ST.SPRING M5 EGS'98		1.00
26	50303026000	SIDE ST.BRKT CPL.125-380'98		1.00
28	50303023054	BRACKET FOR SPRING EGS '98		1.00
29	50303025000	RUBBER FOR SIDE STAND '98		1.00
30	50303024000	SIDESTAND SPRING 125-380EXC'98		1.00
31	10003021000	STAND SPRING SHORT		1.00
59	58429059000	LOCTITE 648 GREEN 10ML		1.00
60	6899785	LOCTITE 243 BLUE 5 ML		1.00
86	54310086200	Self locking nut M8 10.9		1.00