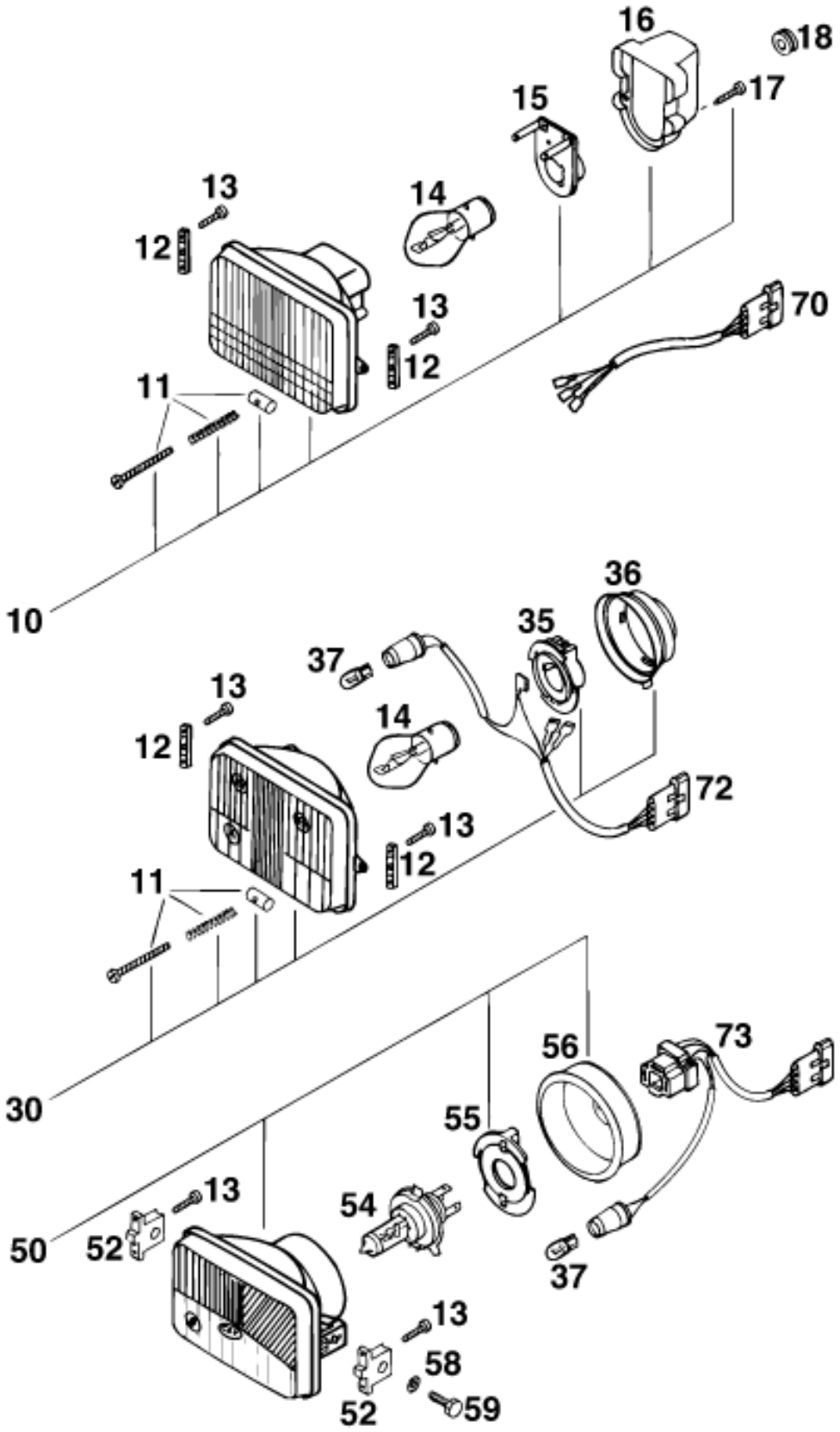

Pos	Part Number	Description	Additional Text	Quantity
10	50211610000	HEADLIGHT CPL. ELCOM '93	USA	1.00
11	50211631000	ADJUSTING SCREW CPL. M4X40		1.00
12	50211410050	HEADLIGHT BRACKET '93		2.00
13	0016040183	SCREW FOR PLASTIC D=4X18		4.00

14	44111038000	BILUX-BULB 12V 35/35W BA20D		1.00
15	57011036000	BULB SOCKET		1.00
16	50211637000	COVER CAP		1.00
17	0981350133	SHEET MET.SCR.DIN7981-3,5X13		2.00
18	31008060000	rubber grommet D=8mm open		1.00
30	50211410000	HEADLIGHT CPL. CEV 322 '93		1.00
35	50211436000	BULB SOCKET		1.00
36	50211437000	* COVER CAP		1.00
37	49011435000	BULB 12V 5W (W2,1X9,5D)		1.00
50	50211510000	HEADLIGHT CEV 394 '93		1.00
52*	58414010000	HEAD LIGHT SUPPORT '98		2.00
54	57111038000	BULB H4 12V 60/55W (P43T)	USA	1.00
55	49011436000	* BULB HOLDER		1.00
56	50211537000	RUBBER CAP		1.00
58	0797060003	TOOTH LOCK WASH. DIN6797-A 6,4		2.00
59	0933060203	HH SCREW DIN0933-M 6X20		2.00
70	50211610010	* CABLE FOR HEADLIGHT '93		1.00
72	50211410010	CABLE FOR HEADLIGHT '93		1.00
73	50211510010	* CABLE FOR HEADLIGHT '93	SGP	1.00

* = New part