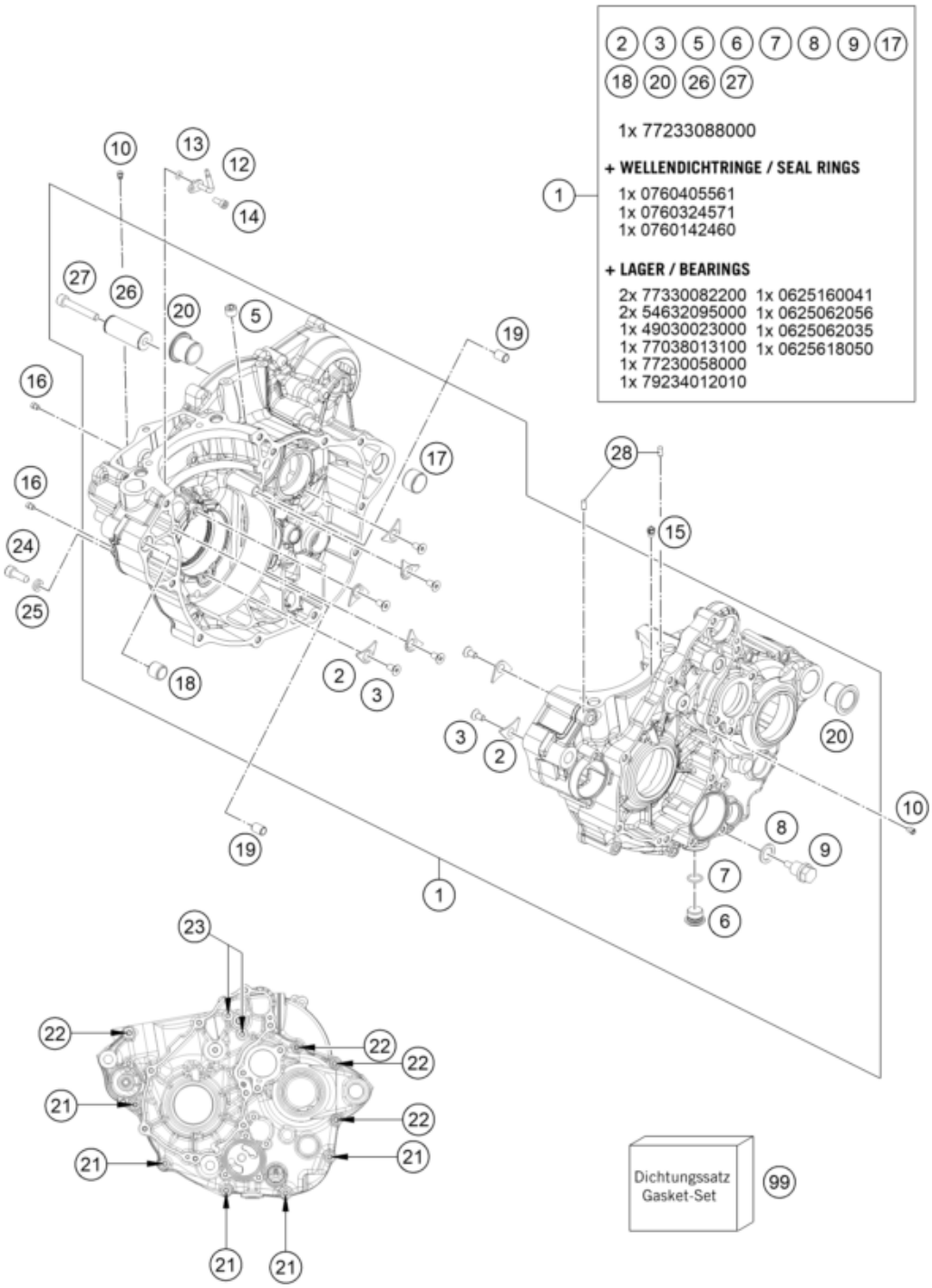

Pos	Part Number	Description	Additional Text	Quantity
1*	79230100133	Engine case cpl.		1.00
2	75030085000	RETAINING PLATE F. CS BEARING		7.00
3	0019050121S	INT. TORX FLAT HEAD M5X12 T25		7.00
5	0906100100	pipe plug DIN 906 M10x1		1.00
6	78036081000	HOLDING BOLT M14X1,5		1.00
7	0770110015	O-ring 11x1.5 VITON		1.00
8	58038022000	CU-seal ring DIN7603-12X18X1.5		1.00
9	58030021000	OILDRAIN PLUG W.MAG. M 12X1,5		1.00
10	80030058060	OIL JET "60" M4		2.00
12	77830064070	OIL JET CURVED " 70 "		1.00
13	0770035020	O-RING 3,5X2,00 NBR		1.00

14	0912040103	AH.SCREW DIN0912-M 4X10		1.00
15	60030063070	oil jet 70 M5		1.00
16	59030058000	JET 100 BING(44-031/180) M4		2.00
17	59030024000	DOWEL 17 X 19 X 12		1.00
18	54630027000	DOWEL BUSHING 13,8X11X12		1.00
19	59030023000	dowel sleeve 6x8x11.5		2.00
20	79230010000	Housing bush		2.00
21	0025060556	HH collar screw M6x55 TX30		5.00
22	0025060656	HH COLLAR SCREW M6X65 TX30		4.00
23	0025060706	HH COLLAR SCREW M6X70 TX30		2.00
24	58030080000	LOCATING SCREW M8 L=23	450/525 MXC, EXC	1.00
25	58030081000	CU-SEAL RING 8 X 14 X 3		1.00
26	59033018000	BUSHING PIN 2000		1.00
27	0912060406	AH SCREW DIN0912 M 6X40		1.00
28	0402050080	CYLINDER ROLLER ZRO 5X8		2.00
99	79030099000	ENGINE GASKET KIT 350 EXC-F 17		1.00

* = New part