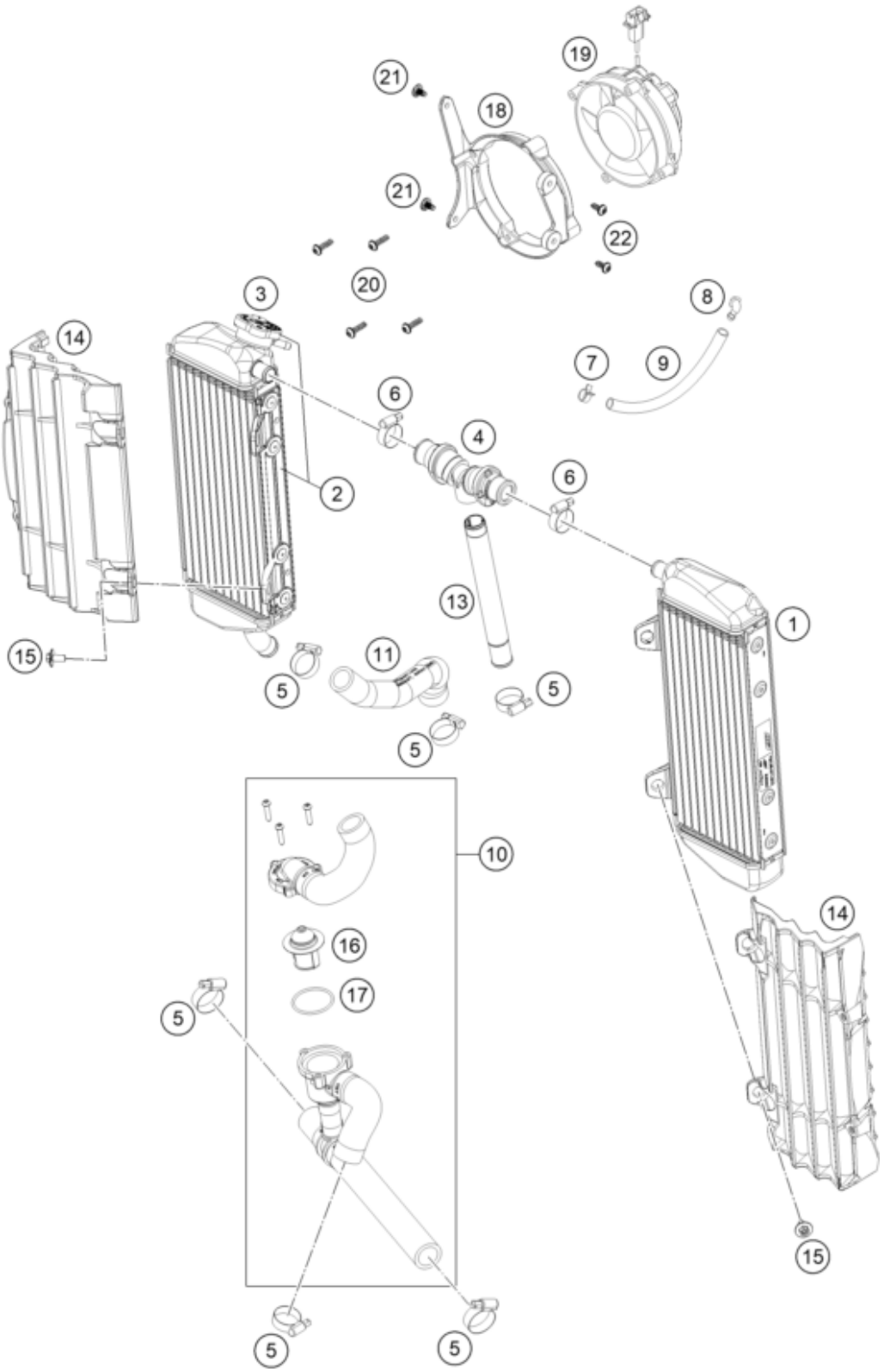

Pos	Part Number	Description	Additional Text	Quantity
1	50435007100	RADIATOR LEFT 17		1.00
2	50435008100	RADIATOR RIGHT 17		1.00
3	79035016000	RADIATOR CAP 1,8 BAR		1.00
4	79035071044	Y-PIECE CPL.		1.00
5	10001020000	HOSE CLAMP GEMI 18-29		5.00
6	42013037400	HOSE CLAMP NORMA 14/24		2.00
7	59007017000	CLAMP YDNAC 10096F (9,6MM)		1.00

8	50303089000	ANGLE PIECE '97		1.00
9	50335030001	PVC-HOSE 6X9		0.00
10*	79235026133	Preformed hose w. therm		1.00
11	79235027000	PREFORMED HOSE WATER PUMP		1.00
13	50435073000	COOLING WATER PIPE		1.00
14*	7903513400030	RADIATOR PROTECTOR		2.00
15	0024060123	COLLAR SCREW M6X12 TX	300 TPI Erzbergrodeo	4.00
16	59435017000	THERMOSTAT 70 DEGREE 04		1.00
17	0770320020	O-RING 32,00X2,00		1.00
18	79635943000	FAN BRACKET	only for US and SixDays	1.00
19	58435041000	FAN CPL. 12V LC4 2000	300 TPI Erzbergrodeo	1.00
20	0081050181	SCREW FOR PLASTIC K50X18 T20	300 TPI Erzbergrodeo	4.00
21	0080150100	EJOT SHEETTRACS SCREW 50X10	300 TPI Erzbergrodeo	2.00
22	0081050121	EJOT PT screw K50x12	only for US and SixDays	2.00

* = New part