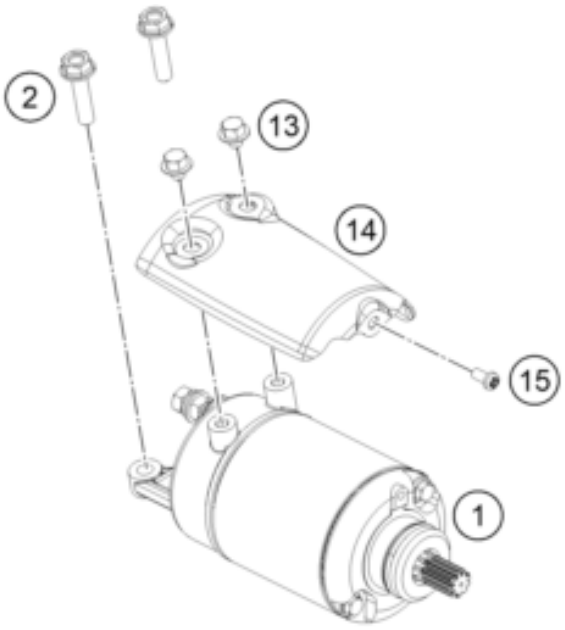
2
13
14
15
1

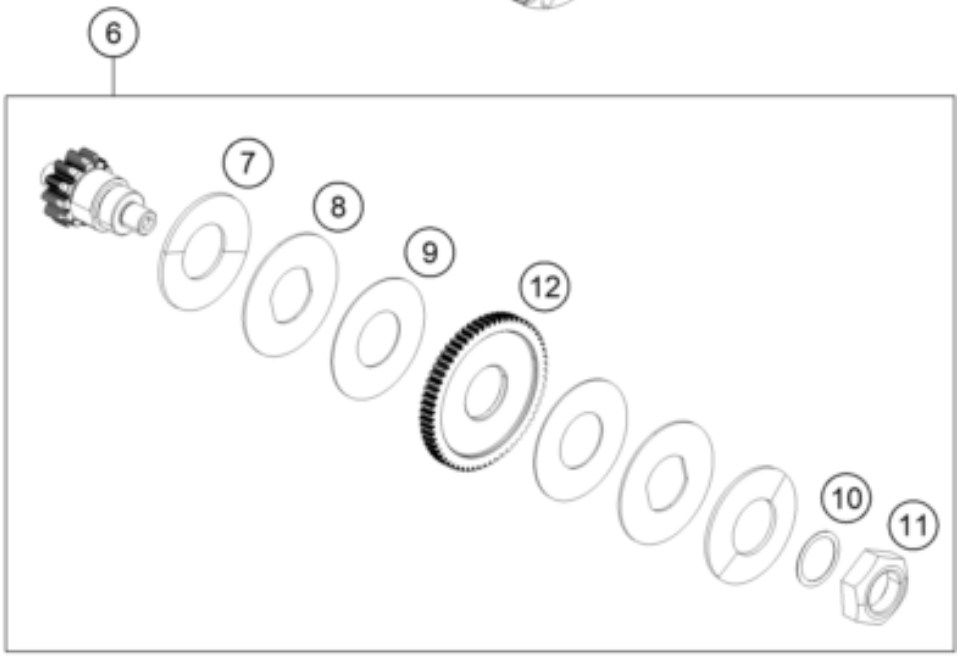
6
7
8
9
12
10
11


5

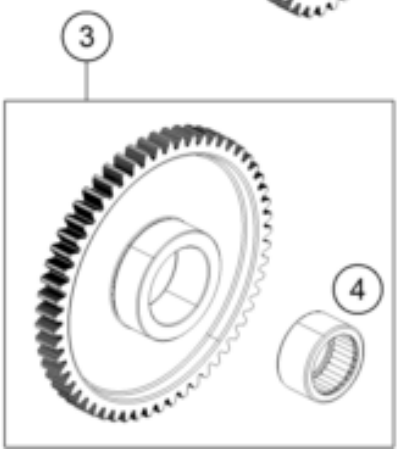
3
4

Pos	Part Number	Description	Additional Text	Quantity
1	93840001000	ELECTRIC STARTER CPL.		1.00
2	J025060256	HH COLLAR SCREW M6X25 SW10		2.00
3	90240020000	GEAR STARTER CLUTCH CPL.		1.00
4	J618253216	NEEDLE ROLLER BEARING HK2516		1.00
5	90240022000	GEAR STARTER COUNTER		1.00
6	90240023033	GEAR STARTER COUNTER CPL.		1.00
7	90240023006	CONICAL WASHER		2.00
8	90240023005	WASHER		2.00
9	90240023004	PAD FRICTION		2.00
10	90240023007	SHIM STARTER 0,30MM		0.00
10	90240023008	SHIM STARTER 0,45MM		0.00
10	90240023009	SHIM STARTER 0,60MM		0.00
10	90240023010	SHIM STARTER 0,75MM		0.00
11	90240023003	NUT STARTER COUNTER		1.00
12	90240023002	GEAR STARTER COUNTER		1.00
13	J025060083S	HH COLLAR SCREW M5X6		2.00
14	93840012000	SHIELD STARTER MOTOR		1.00
15	J005040083	SCREW PAN CROSS M4X8		1.00