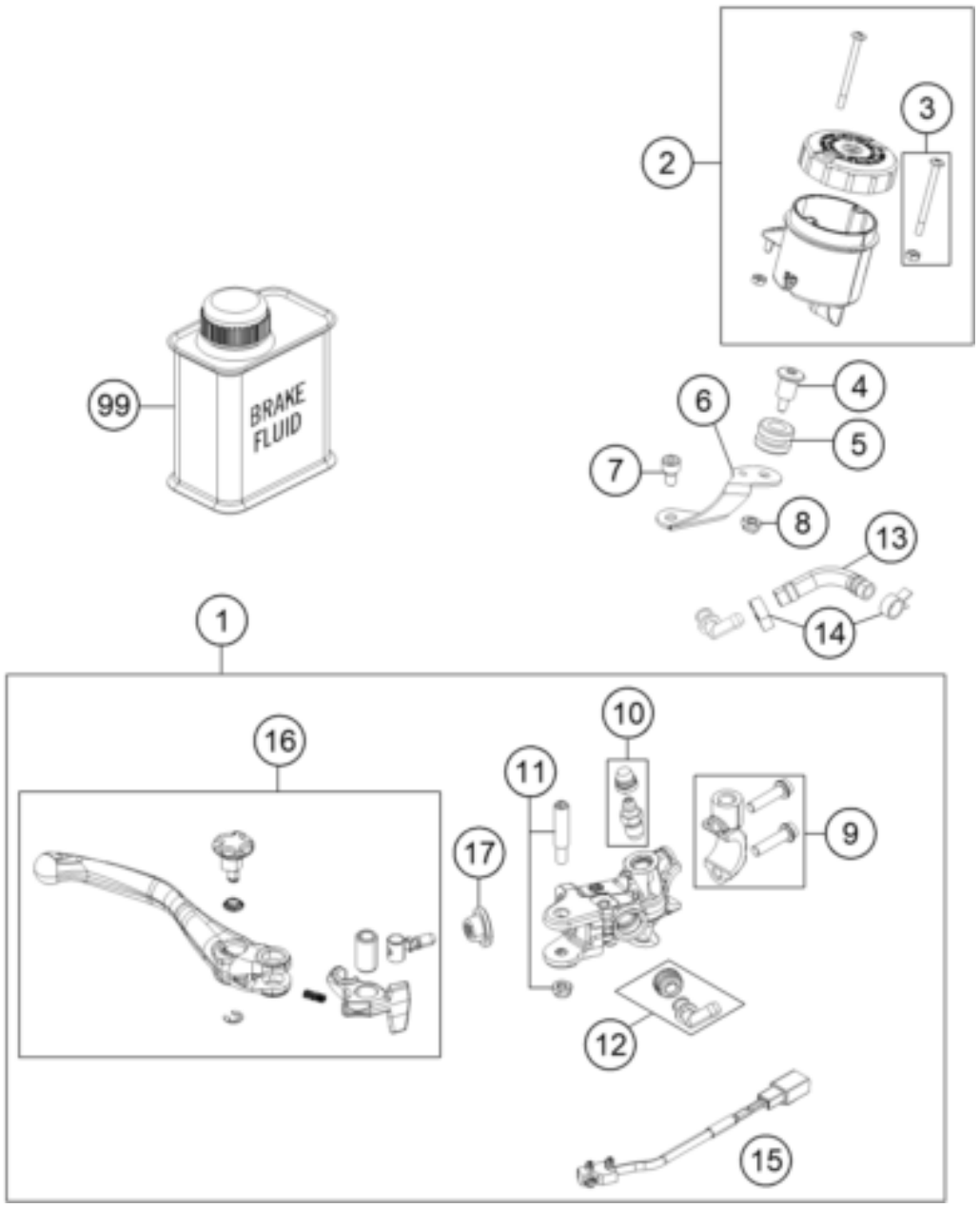

Pos	Part Number	Description	Additional Text	Quantity
1	6201310110030	Hand brake cylinder complete		1.00
2	61013009202	BRAKE FLUID RESERV. WHITE CPL.		1.00
3	61013009203	SCREW + NUT F. RESERVOIR		1.00
4	61013013050	SCREW RET.PANEL-RESERVOIR		1.00
5	61013013000	RUBBER BUSH 05		1.00
6	61013009001	RET.PANEL FLUID RES. FRONT 05		1.00
7	61013021000	SCREW RET.PANEL-BRAKE CYLINDER		1.00
8	61013009004	NUT FOR RESERVOIR		1.00
9	61013005000	CLAMP CPL. 05		0.00
9	76013005100	CLAMP CPL. 16		1.00
10	60013020000	BLEEDER SCREW WITH CAP		1.00
11	61013006000	LEVER SCREW CPL. 05		1.00
12	54513155000	ANGLE PIECE		1.00
13	69013069001	HOSE FOR RESERVOIR 6X1,5	1X 60MM, 1X 195MM	1.00
14	58007017000	YDNAC-clamp 10101 (10.4MM)	300 TPI Erzbergrodeo	2.00

15	60311050000	BRAKE LIGHT SWITCH FRONT		1.00
16	6251300214430	HAND BRAKE LEVER CPL. BLACK		1.00
17	61013008000	RUBBER CUP 05		1.00
99	00062030000	Brake fluid DOT5.1 0,25L		1.00