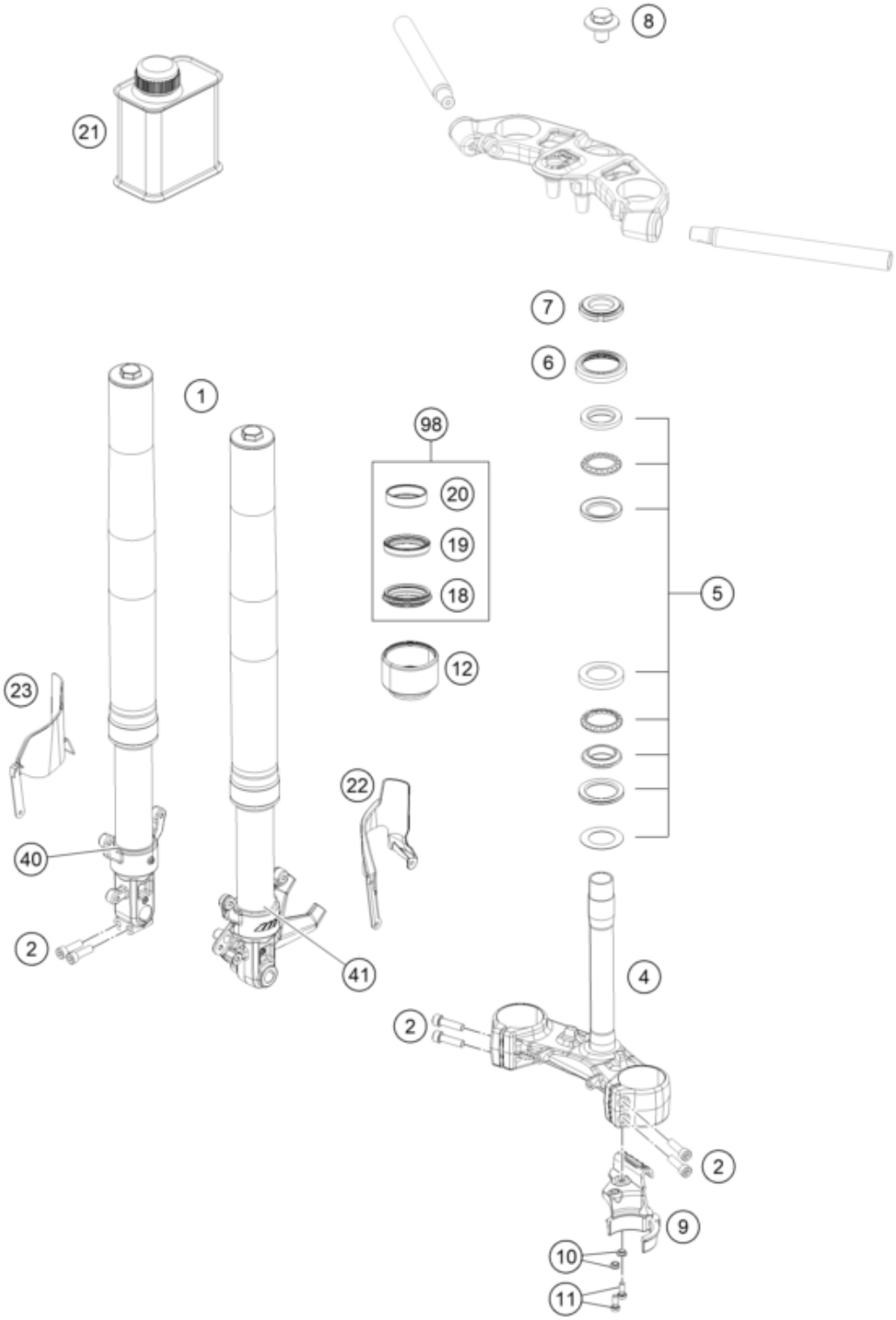

Pos	Part Number	Description	Additional Text	Quantity
1	93601001100	Fork leg left cmpl.		1.00
1	93601002000	Fork leg right cmpl.		1.00
2	90501045000	AH SCREW M8X1.25X30		6.00
4	9010103210033	Lower triple clamp cpl.		1.00
5	90101080044	STEERING HEAD BEARING-KIT		0.00
6	90101086000	protection cap		1.00
7	90101036000	adjusting ring steering head		1.00
8	90501044000	steering head screw		1.00
9	90113055000	HOSE CLAMP		1.00

10	90113055010	sleeve for hose clamp		2.00
11	J021060156	AH SCREW M6X15 10.9		2.00
12	90201025000	FORK FRONT DUST COVER	only for HD fork	2.00
18	43570624	Dirt scarper SKF 43mm black		2.00
19	43570623	Shaft seal SKF 43x52,9x11,4 bl		2.00
20	43570618	Guide bushing 43x47x12		2.00
21	48601166S1	Fork Fluid Viscosity 4.0 5L		1.00
22	90101092000	FORK PROTECTION L/S		1.00
23	90101093000	FORK PROTECTION R/S		1.00
40	93501007000	Axle clamp and fork pipe right		1.00
41	93501006000	Axle clamp and fork pipe left		1.00
98	90101000010	REP. KIT FORK KPL.		0.00