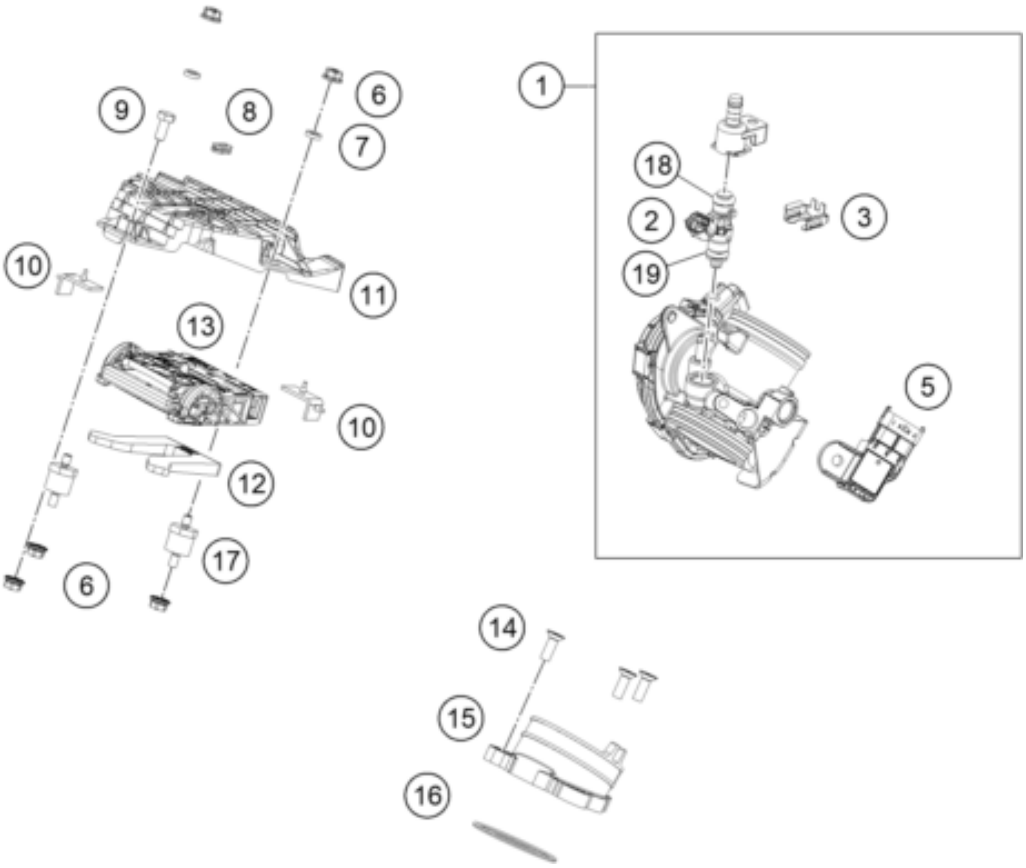

Pos	Part Number	Description	Additional Text	Quantity
1	95841001000	Throttle valve body		1.00
2	90241023000	FUEL INJECTOR		1.00
3	90141001001	INJECTOR CLIP		1.00
5	93041085000	Pressure sensor		1.00
6	J926060000	FLANGED NUT M6 WS10 SELF LOCK.		3.00
7	93041029020	Sleeve		2.00
8	93541034000	DAMPER ECU		1.00
9	J933060146	Hexagonal bolt M6x14		1.00
10	93841036000	rubber band, ECU		2.00
11	93041029000	Control unit bracket		1.00
12	93041030100	Rubber cowl pad		1.00
13	94341031000	Engine control unit		1.00
14	J991060203S	COUNTERSUNK SCREW M6X20		3.00
15	90241002000	PIPE INTAKE		1.00
16	J770053024	O-RING 53X2,4		1.00
17	93011038000	Bump rubber ECU support		2.00
18	55641023020	O-ring		1.00
19	55641023010	O-ring		1.00