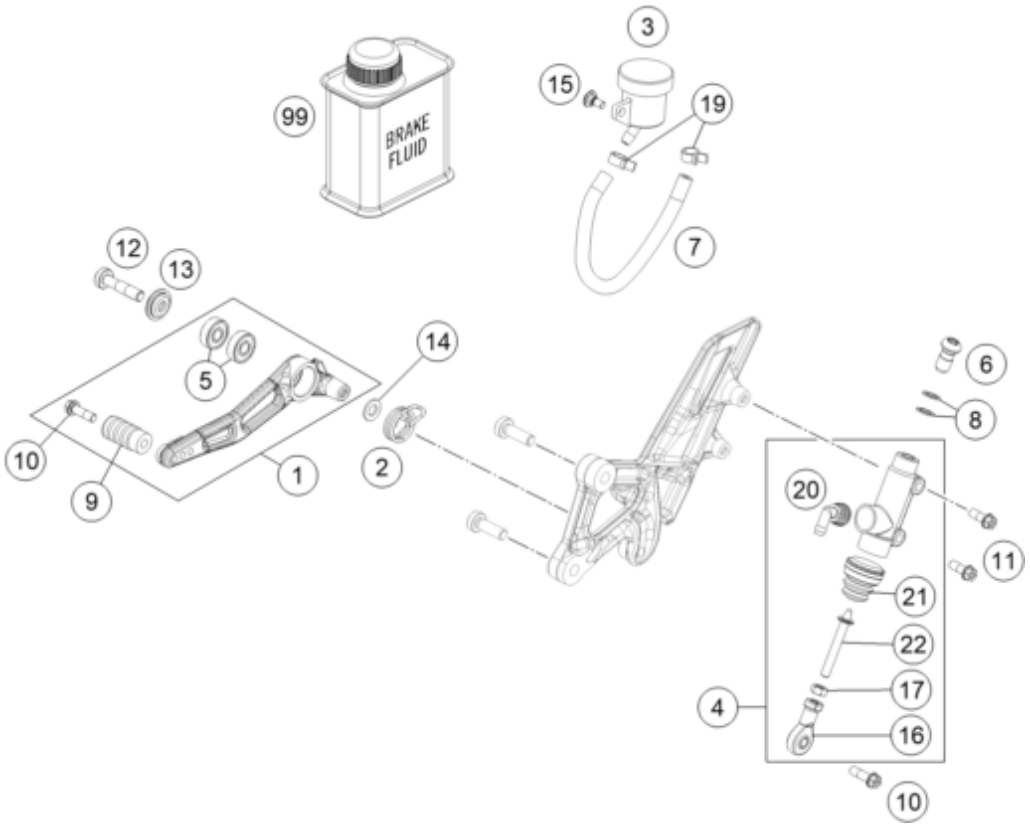

Pos	Part Number	Description	Additional Text	Quantity
1	6131305004433S	FOOT BRAKE LEVER CPL.		1.00
2	61313052000	SPRING		1.00
3	61013069000	reservoir, rear cpl.		1.00
4	6031306000030	REAR BRAKE CONTROL		1.00
5	0625006087	Grooved ball bearing 608 2RS C		2.00
6	62113020100	banjo bolt M10x1x19.5		1.00
7	69013069001	HOSE FOR RESERVOIR 6X1,5	1X 60MM, 1X 195MM	1.00
8	0603100141	sealing ring DIN 7603 10x14x1	ONLY FOR LC4 ADVENTURE	2.00
9	58303060051	Brake lover pedal Duke 94		1.00
10	0025060206S	HH collar screw M6x20 TX30		2.00
11	0025060166S	HH collar screw M6x16 TX30 SL		2.00
12*	0035080306S	AH collar screw M8x30 ISA45		1.00
13	61334041000	SPECIAL WASHER D=23X7,2MM		1.00
14	0125080003	washer DIN 125 A -8.4		1.00
15	69013099050	Screw for expansion tank	ONLY AUS	1.00
16	54603069000	SWIVEL HEAD M6 FOOT BRAKE LEV.		1.00
17	0934060003	Hex. nut DIN 934 M6		1.00
19	58007017000	YDNAC-clamp 10101 (10.4MM)	300 TPI Erzbergrodeo	2.00
20	54513155000	ANGLE PIECE		1.00
21	54513151000	RUBBER SLEEVE		1.00
22	60313056044	PUSH ROD CPL.		1.00
99	00062030000	Brake fluid DOT5.1 0,25L		1.00

* = New part