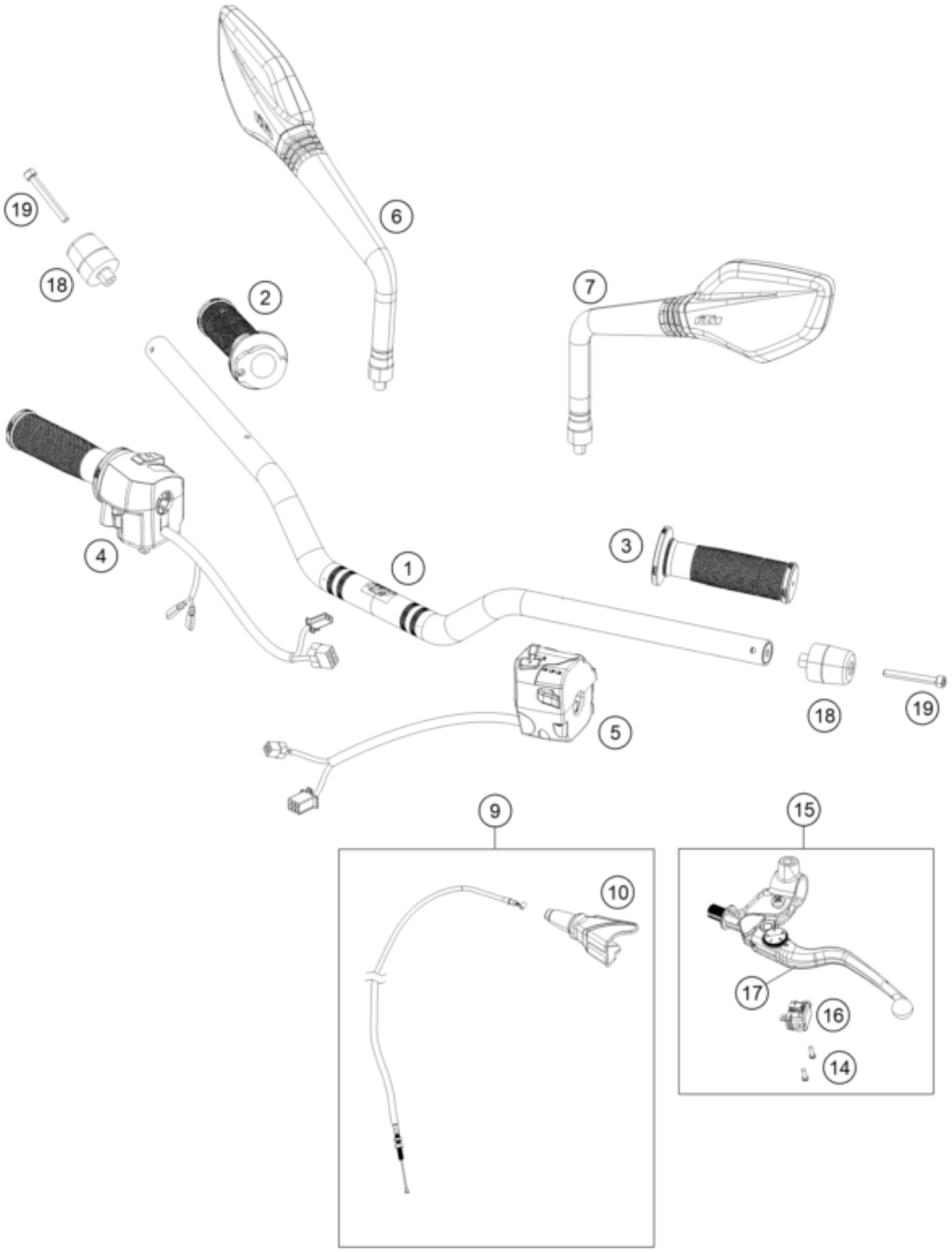

Pos	Part Number	Description	Additional Text	Quantity
1	93002001000	Handlebar		1.00
2	93702010033	THROTTLE GRIP		1.00
3	90802039000	HAND GRIP L/S		1.00
4	93511074000	START-EMERGENCY STOP SWITCH		1.00
5	93011070000	Light switch		1.00
6	93012041000	Mirror right		1.00
7	93012040000	Mirror left		1.00
9	90802090000	CLUTCH CABLE		1.00
10	93802016000	BOOT CLUTCH LEVER		1.00
14	90232014002	Screw pan cross M3x0.5		2.00
15	93302131000	Clutch lever adjustable		1.00
16	90511049000	clutch switch		1.00
17	93502031100	Clutch lever		1.00

18	90202004001	HANDLEBAR WEIGHT		2.00
19	J912060553	Hexagon screw M6X55		2.00