Skalierung: 25% 75%

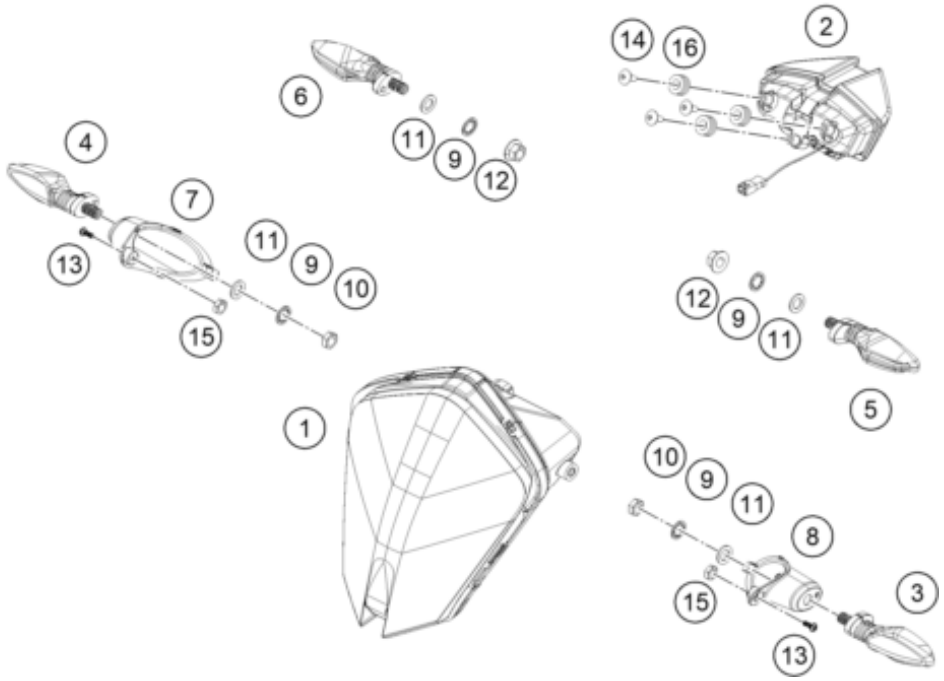

Pos	Part Number	Description	Additional Text	Quantity
1	95814001000	LAMP HEAD		1.00
2	63514040000	Tail light		1.00
3	91214025000	FLASHER L/S		1.00
4	91214026000	FLASHER R/S		1.00
5	95814026000	INDICATOR REAR LH		1.00
6	95814025000	INDICATOR REAR RH		1.00
7	95814011090	Turn signal bracket, right, EU		1.00
8	95814010090	Turn signal bracket, left		1.00
9	J06797100183	Toothed washer, M10		4.00
10	J934100006	Nut hex thin-M10x1.25		2.00
11	J125100009	Washer M10		4.00
12	J926100003	nut-hex-flanged		2.00
13	J005050121	Oval head screw M5X12		2.00
14	J900000401200	screw tapping-dia. 4.5xl 12xbr		3.00
15	J934050003	nut hex thin-m5x0.8xht.3.2xbri		2.00
16	93014017000	Rubber bushing		4.00