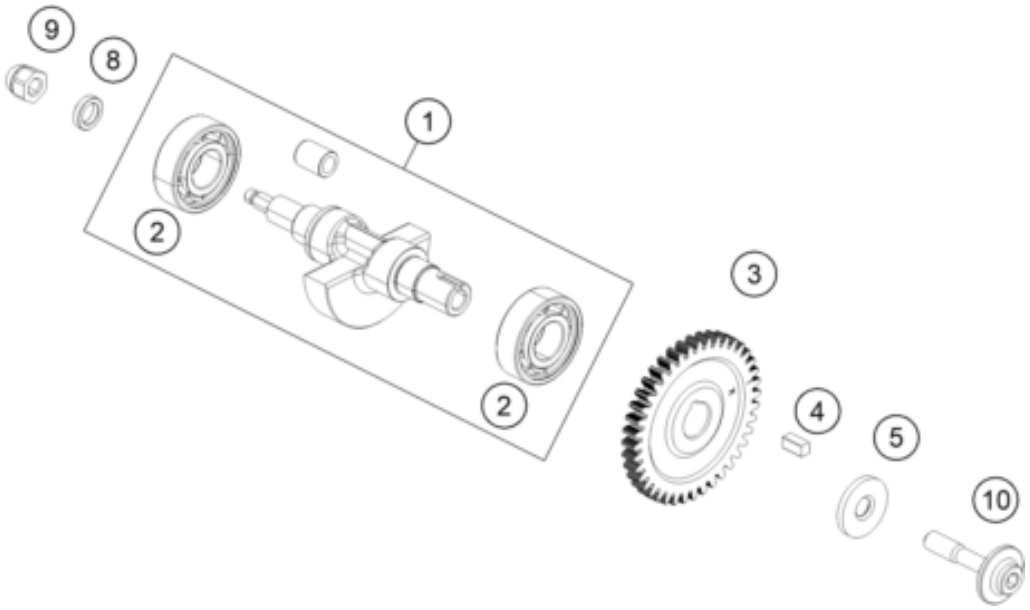

Pos	Part Number	Description	Additional Text	Quantity
1	90130057300	BALANCER SHAFT		1.00
2	J625062030	BALL BEARING 6203		2.00
3	90130055000	DRIVE WHEEL BALANCER SHAFT		1.00
4	90130055001	Parallel key		1.00
5	90130057150	Washer 8,2X26X3		1.00
8	90130055006	SPACER SHIM		1.00
9	90135058000	DOME NUT WAPU-WHEEL		1.00
10	90130055103	Special screw		1.00