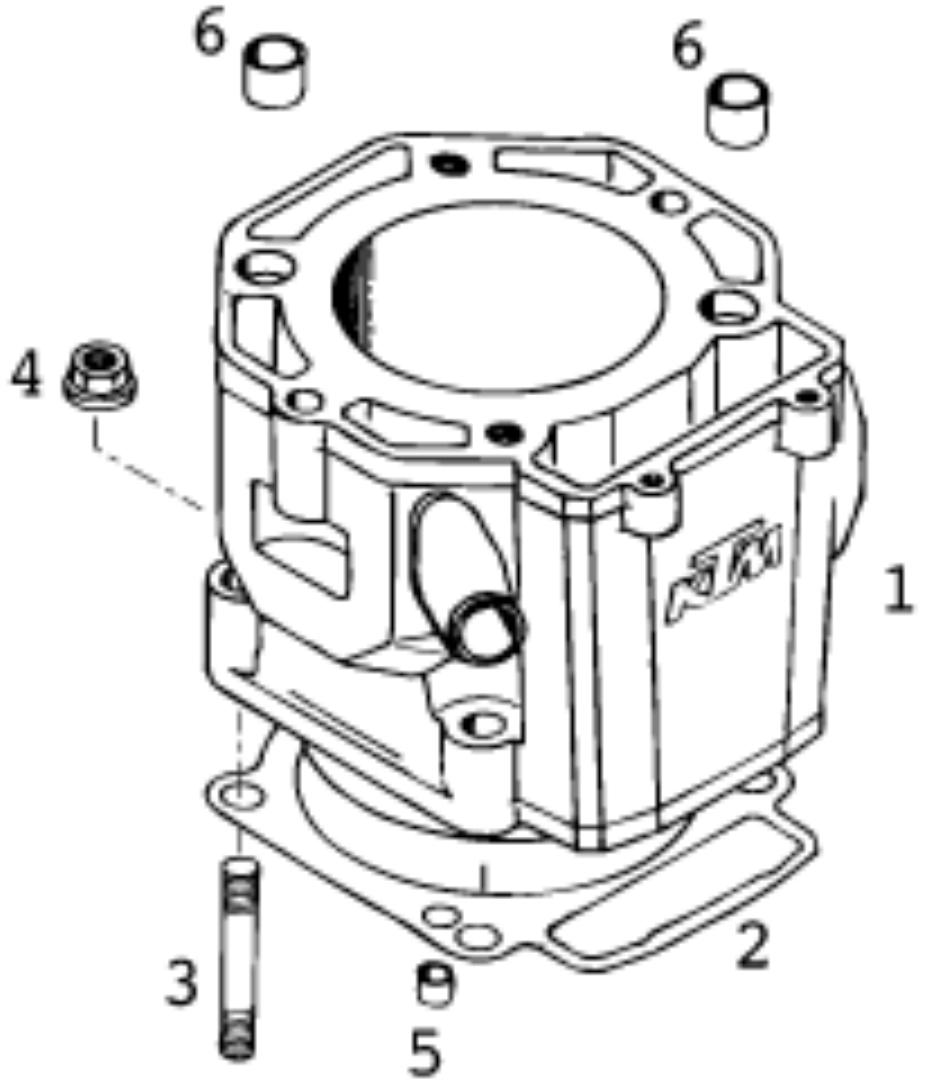

Pos	Part Number	Description	Additional Text	Quantity
1	5763000510029	CYLINDER 89MM GREY 400LC4 '98		1.00
1*	57630005100	CYLINDER 89MM BLACK 400'97		1.00
1	5833000510029	CYLIND. 101MM GREY 620LC4-E'97		1.00
1*	58330005100	CYLINDER 101MM BLACK 620/640		1.00
2	58030030000	CYL. BASE GASKET 0,5MM GREEN	400	1.00
2*	58030030100	CYL. BASE GASKET 0,7MM BLACK	640	1.00
3	0835100456	STUD DIN0835-M10X45	250	4.00
4	0331100003	COLLAR NUT DIN6923-M10 WS=15		4.00
5	49030090000	DOWEL 9,8 X 7 X 10	FS-E	2.00
6	58330023000	DOWEL 17 X 14 X 9,5		2.00

* = New part