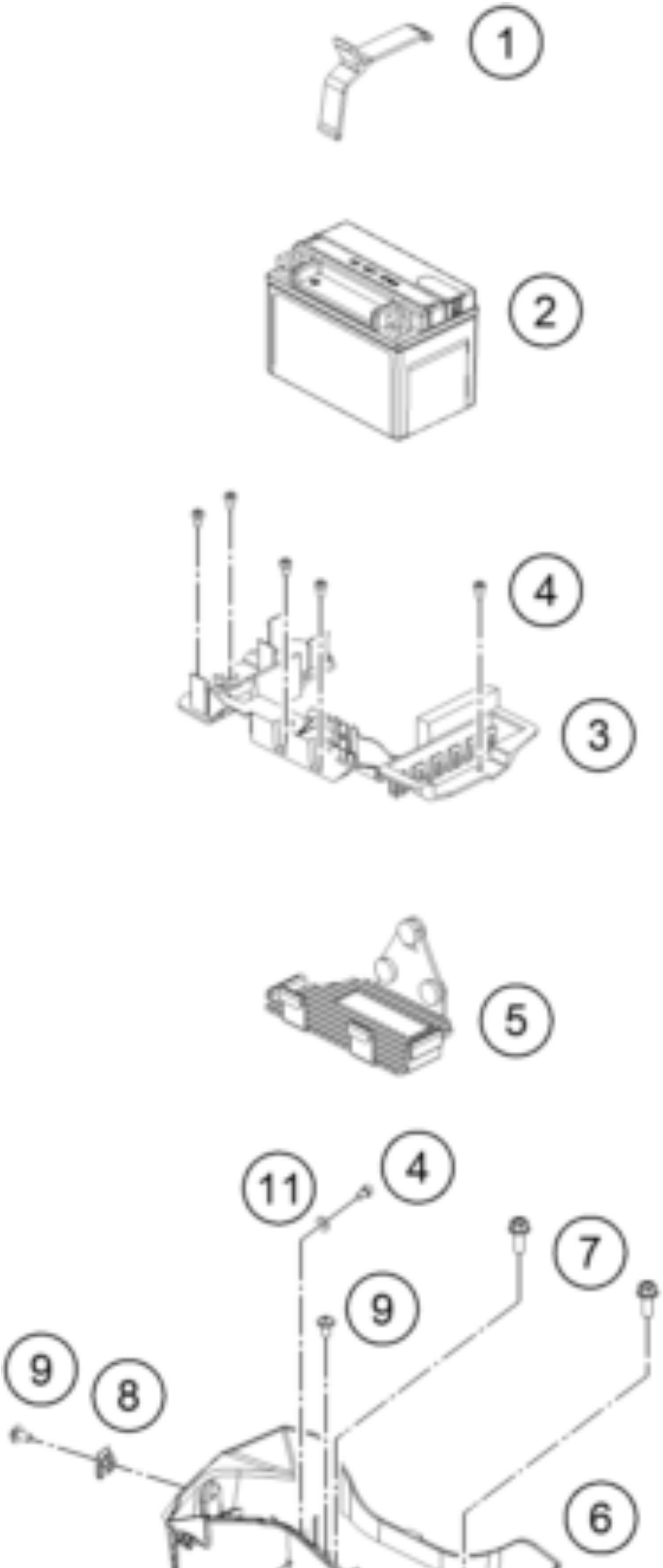
1
2
4
3
5
11
4
7
9
9
8
6

Pos	Part Number	Description	Additional Text	Quantity
1	90511054001	BRACKET RUBBER FOR BATTERY		1.00
2	90611053000	BATTERY 12V/8AH		1.00
3	90511055000	BATTERY BRACKET		1.00
4	90511054002	AH SCREW M5X8		6.00
5	90511054000	RUBBER BATTERY BRACKET		1.00
6	90508024000	BATTERY CASE		1.00
7	J025080203	HH COLLAR SCREW M8X20 SW12		2.00
8	90103097000	clip nut		2.00
9	90508006001	SOCKET HEAD BOLT M6X12		3.00
10	90508048000	PLUG COVER		1.00
11	J125050005	WASHER M5		1.00