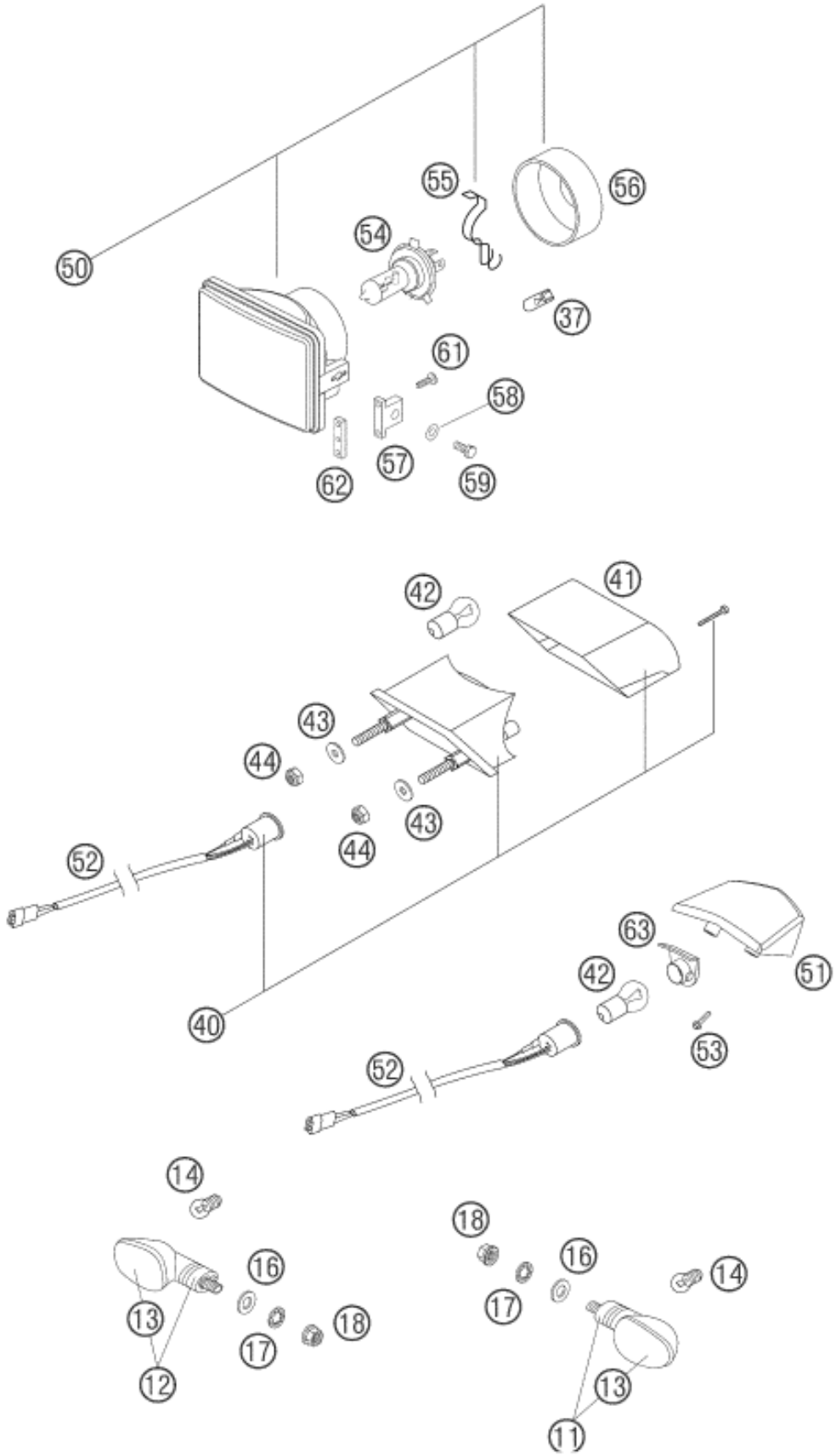

Pos	Part Number	Description	Additional Text	Quantity
11	5841402500030	FLASHER CPL.FRONT L/S REAR R/S	BLACK	2.00
12	5841402600030	FLASHER CPL.FRONT R/S REAR L/S	BLACK	2.00

13	58414028000	FLASHER LENS L/S & R/S '98	ORANGE	4.00
14	44111015100	BULB 12V 10W (BA15S)		4.00
16	0125100003	washer DIN 125 A 10.5	ONLY FOR 640 DUKE	4.00
17	0797100003	LOCK WASHER DIN6797-J10,5 ZI		4.00
18	58414030000	HH COLLAR NUT M10X1,25 WS=13	MINI ADV.	4.00
37	49011435000	BULB 12V 5W (W2,1X9,5D)		1.00
40	50314040100	RR LIGHT CPL.125-380 EGS '98	NUMBER PLATE CARRIER LONG	1.00
41	50314041100	REAR LIGHT LENS 125-380 EGS'98		1.00
42	58414042000	BULB 12V 21/5W (BAY15S)REINFO.		1.00
43	0021060003	Washer DIN9021-A 6.4	ONLY USA	2.00
44	0985060003	Self lock. nut DIN985-M6-A2		2.00
50	59014002000	HEAD LIGHT 186(RI)"1003202 R'	RIGHT TRAFFIC	1.00
50	59014002100	HEAD LIGHT 186(LE)"1003203 L'	LEFT TRAFFIC	1.00
51*	50314041200	REAR LIGHT LENS 04	NUMBER PLATE CARRIER SHORT	1.00
52	50311076000	WIRING HARNESS REAR 125-380'98		1.00
53	0017060203	EJOT PT SCREW K60X20 WS=6	MXC, EXC	2.00
54	54611038012	BULB HS1 12V 35/35W WHITE	SOCKET PX43T	1.00
55	49011436100	BULB HOLDER	EU/AUS/GB	1.00
56	50211537000	RUBBER CAP		1.00
57	58414010100	HEAD LIGHT SUPPORT 2001		2.00
58	0125060003	WASHER DIN0125-A 6,4		2.00
59	0933060203	HH SCREW DIN0933-M 6X20		2.00
61	0016040183	SCREW FOR PLASTIC D=4X18		4.00
62	50211410050	HEADLIGHT BRACKET '93		2.00
63*	54811076050	LAMP HOLDER 04		1.00

* = New part