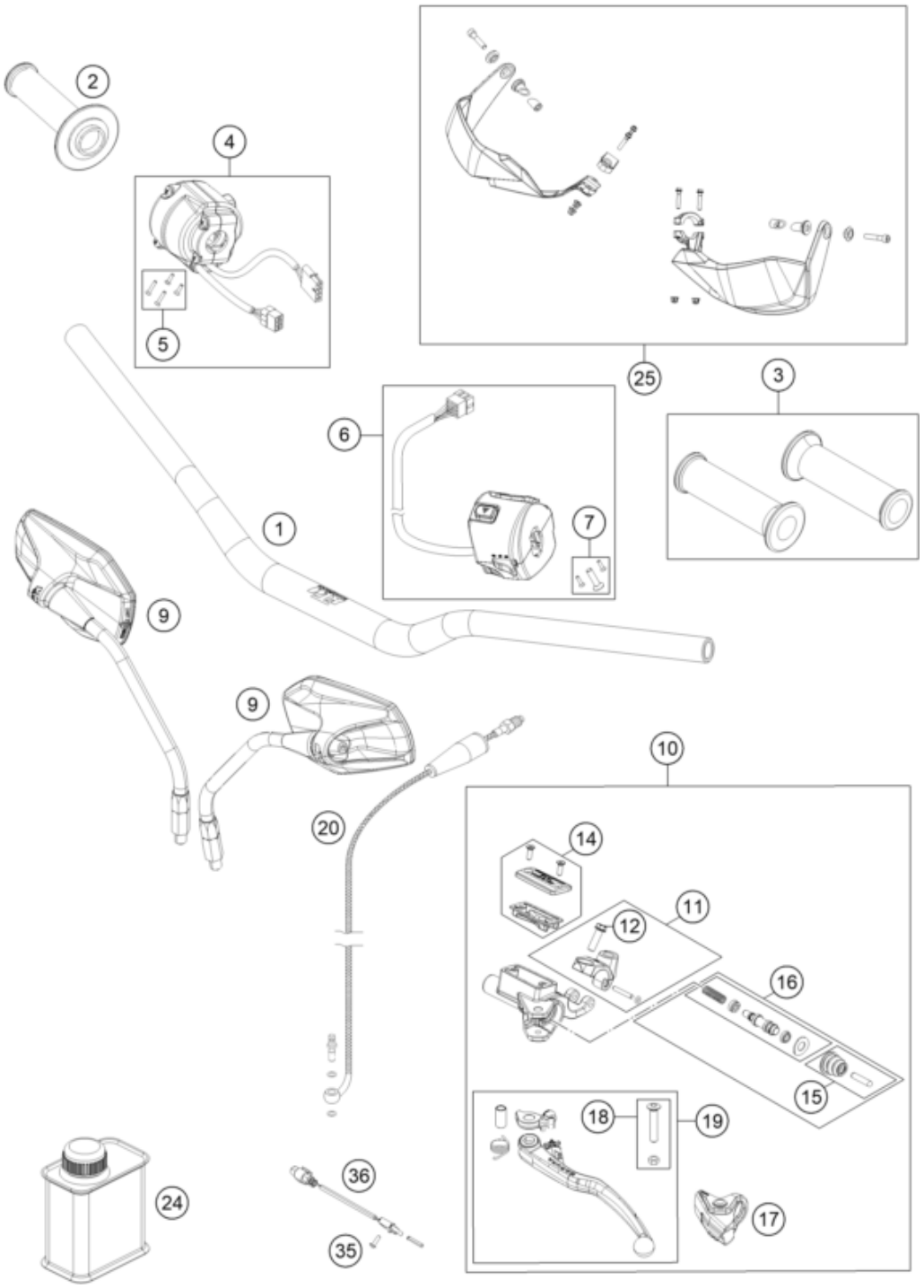

Pos	Part Number	Description	Additional Text	Quantity
1	60302101000015	HANDLEBAR		1.00
2	76002010000	THROTTLE GRIP		1.00
3	76002021000	GRIP SET OPEN END		1.00
4	76011073100	START-STOP/E-GAS		1.00
5	76011073110	SCREW SET START-STOP SWITCH		1.00
6	60311070100	HANDLEBAR SWITCH		1.00
7	60311070110	SCREW SET HANDLEBAR SWITCH		1.00
9	60312040100	MIRROR		2.00
10	60302030144	MASTER CYLINDER DOT CPL. 12MM		1.00
11	76513005000	CLAMP, CYL. PIN, O-RING		1.00
12	0025060166	HH collar screw M6x16 TX30		1.00

14	25002033000	COVER HYDR. CLUTCH DOT CPL.		1.00
15	76502046000	PUSH ROD CPL. 13		1.00
16	60302032100	REPAIR KIT PISTONS DOT		1.00
17	76502037000	PROTECT.CAP FOR LEVER PERCH 13		1.00
18	50302038200	LEVER SCREW SHORT CPL. 09		1.00
19	60302031000	CLUTCH LEVER LONG CPL. 2013		1.00
20	60032063100	CLUTCH PIPE LC8 ADV '03		1.00
24	00062030000	Brake fluid DOT5.1 0,25L		1.00
25	6030217910030	HANDGUARD CLOSED BLACK HIGH		1.00
35	0985030103	FLAT HEAD SCREW DIN7985 M3x1		1.00
36	83111049000	CLUTCH SWITCH ATV		1.00