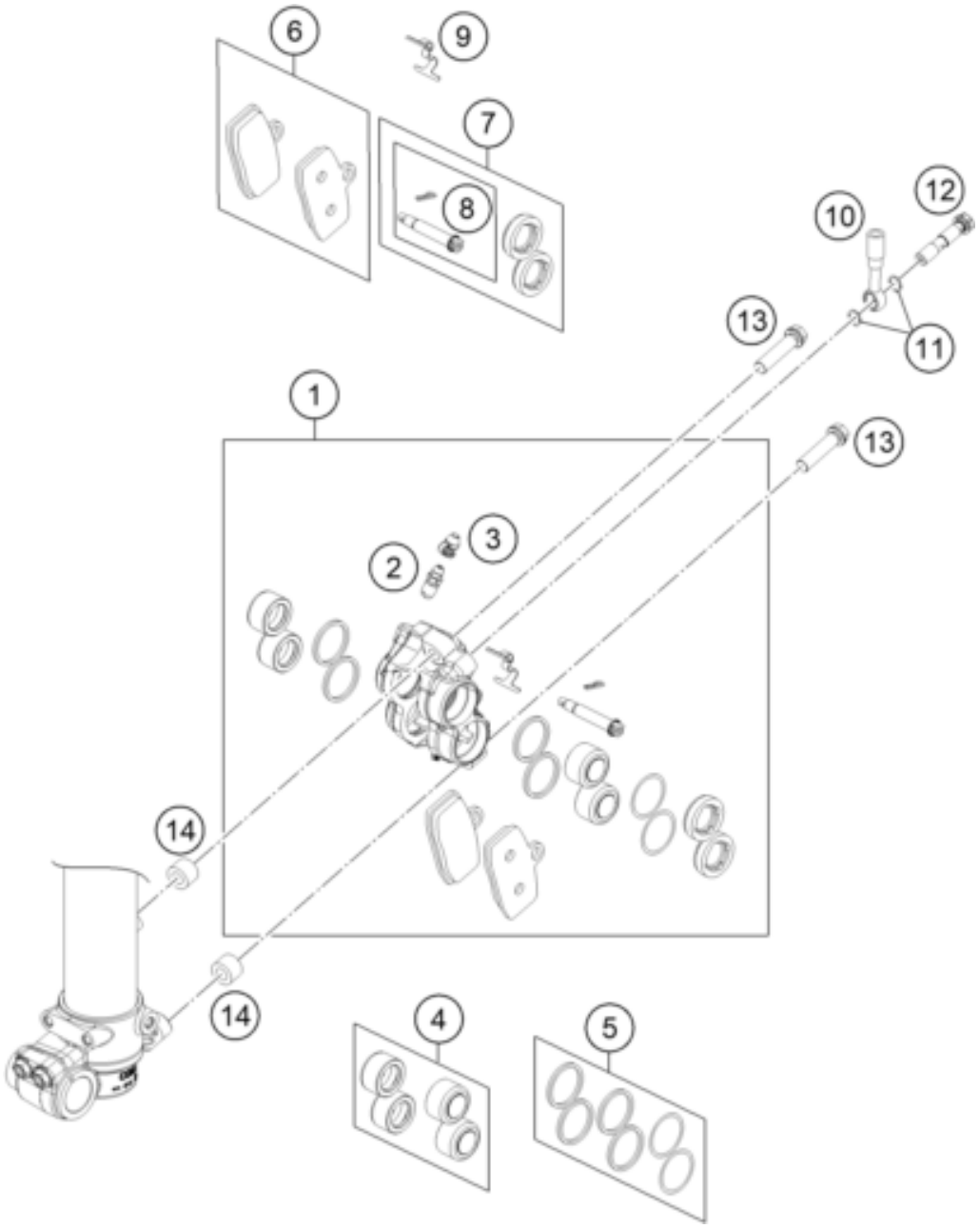

Pos	Part Number	Description	Additional Text	Quantity
1	47013015100	BRAKE CALIPER FRONT		1.00
2	47013020000	BLEEDER SCREW M6		1.00
3	47013021000	CAP FOR BLEEDER SCREW		1.00
4	47013019000	REPAIR KIT BRAKEPISTON		1.00
5	47013022000	REP. KIT SEALS		1.00
6	47013030000	BRAKE PAD SET FRONT 2012		1.00
7	47013023000	PISTONCOVER 85SX 2012		1.00
8	47013030050	PIN BRAKE PAD CPL. 2012		1.00
9	47013018100	RETAINING SPRING FRONT 85SX		1.00
10	72013010000	FRONT BRAKE HOSE L=1165MM DOT		1.00
11	0770080019	O-RING 8,00X1,00 FORMULA		2.00
12	47013025000	Hollow screw, brake cylinder 0		1.00
13	0025080456S	HH COLLAR SCREW M8X45 ISA40		2.00
14	70013098150	DISTANCE SLEEVE 8,1X15X20,5MM		2.00