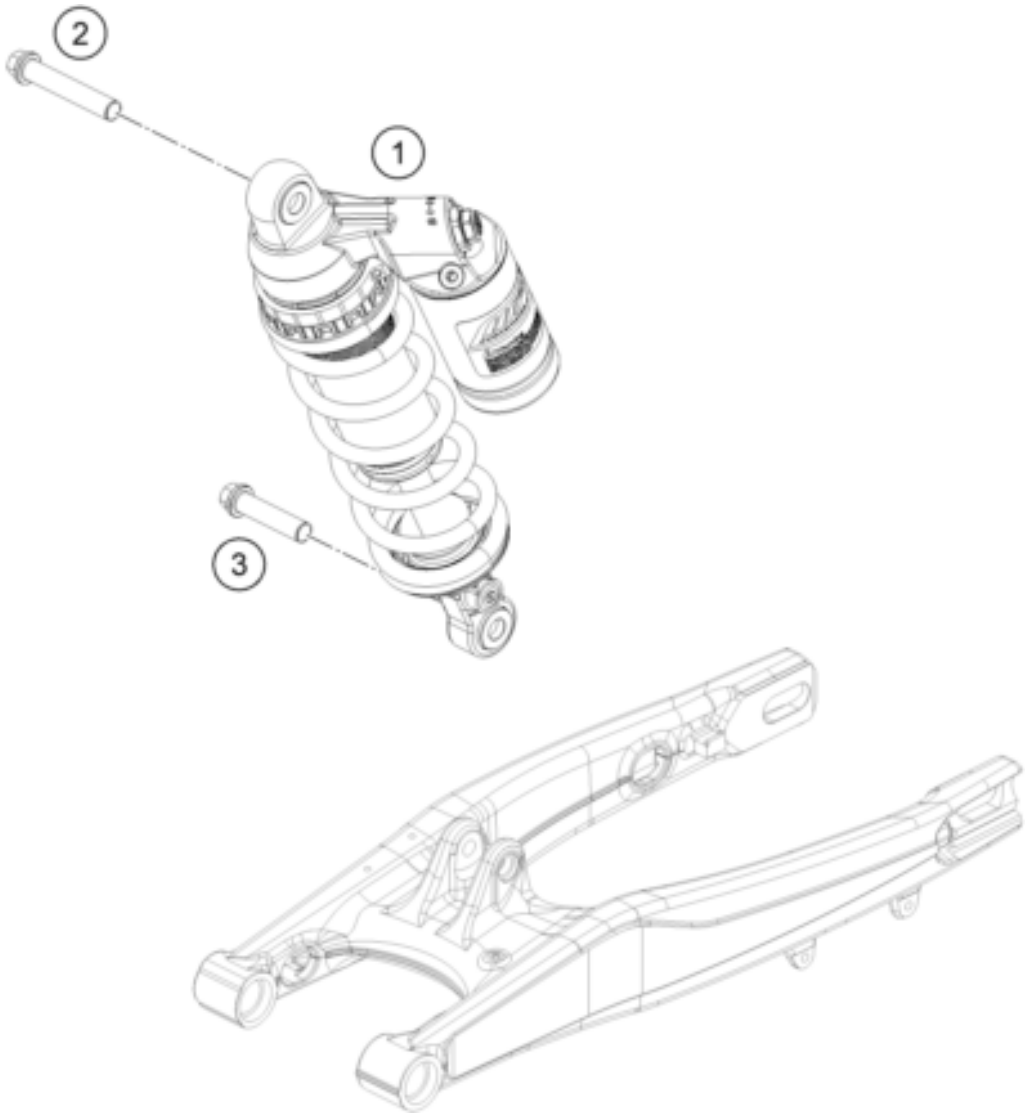

Pos	Part Number	Description	Additional Text	Quantity
1	15187N4101	MONOSHOCK FREERIDE E		1.00
2	70004016000	MONOSHOCK SCREW TOP M12X80		1.00
3	0025120506S	HH COLLAR SCREW M12X50 TX45		1.00