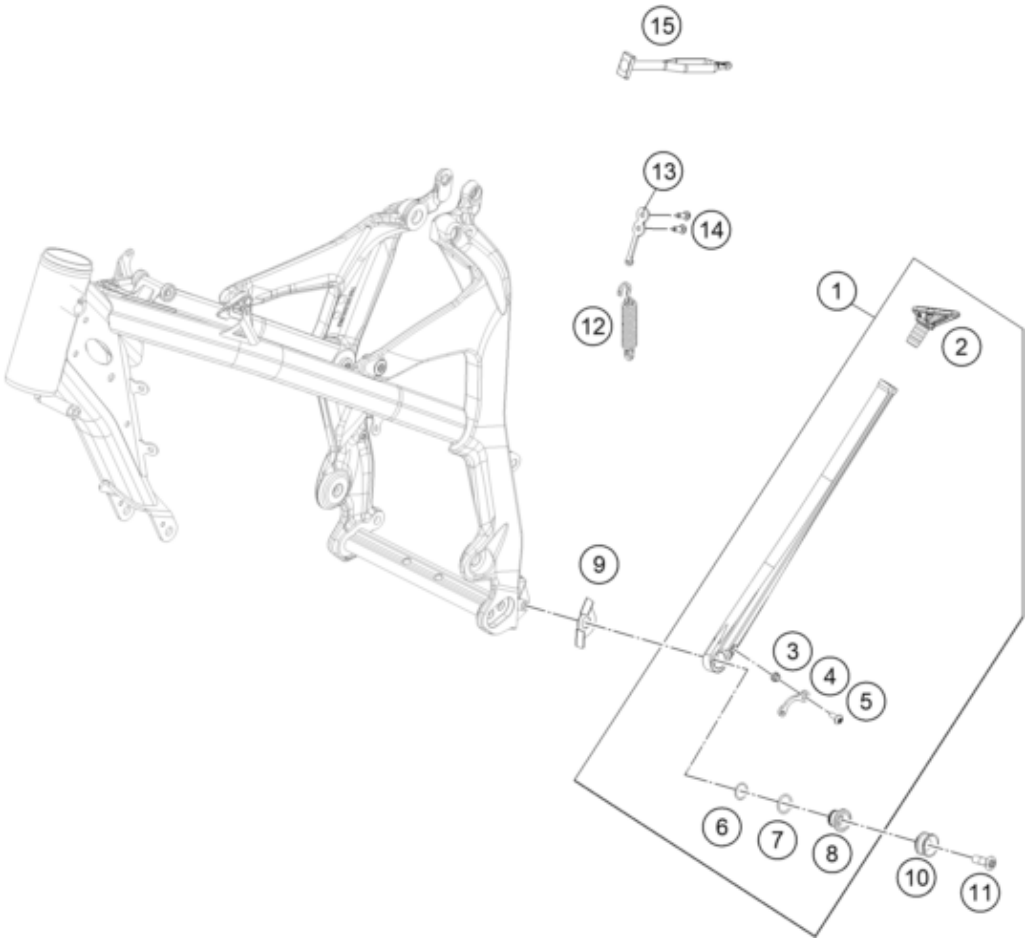

Pos	Part Number	Description	Additional Text	Quantity
1	70003023044	SIDE STAND CPL. 2012		1.00
2	78003023155	STAND BASE		1.00
3	78003023070	SPACER BUSH. SPRING BRACKET		1.00
4	78003023090	SPRING BRACKET F. SIDE ST. 08		1.00
5	58605083014	Oval head screw M5x14 TX25	only for "R"	1.00
6	0770125015	O-RING 12,5X1,5 NBR		1.00
7	0770180020	o-ring 18.00x2.00 NBR70		1.00
8	78003023080	SIDE STAND BUSHING EXC USA 08		1.00
9	47003023050	STOP SHEET SST		1.00
10	78003023081	Side stand bushing	ONLY FOR 78003023081	1.00
11	0019080356	COUNTERSUNK SCREW ISA45 M8X35		1.00
12	81203024000	SIDE STAND SPRING EYE MOVEABLE	ONLY FOR EXC	1.00
13	70003024050	SIDE STAND SPRING PLATE 12		1.00
14	0017060205	SCREW FOR PLASTIC K60X20 SW6		2.00
15	50303018000	RUBBER L=145MM		1.00