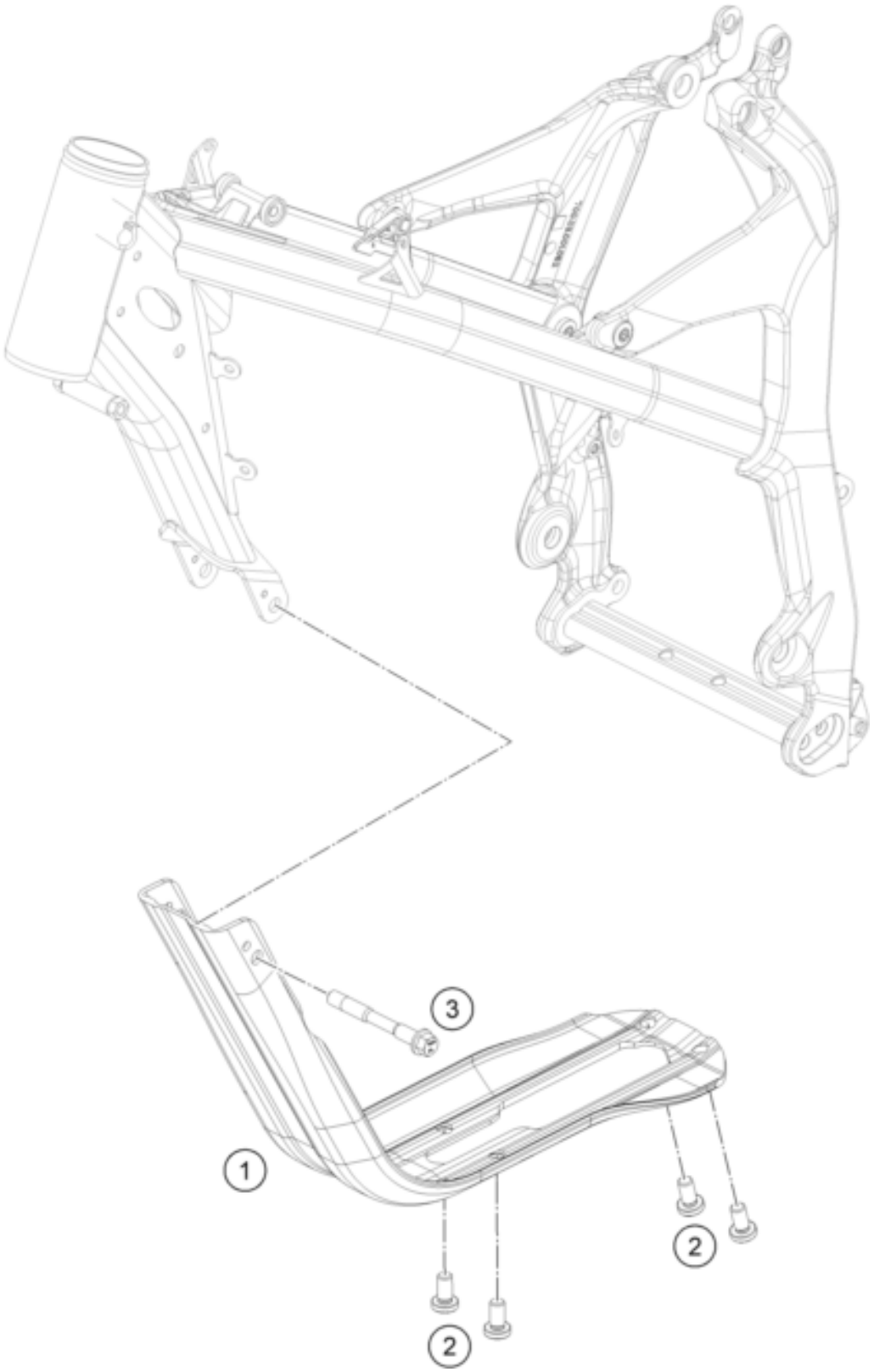

Pos	Part Number	Description	Additional Text	Quantity
1	70003090144	ENGINE GUARD CPL.		1.00
2	0035100209	AH collar screw M10x20 ISA45		4.00
3	47003013000	ENGINE BRACKET SCREW 85 SX		1.00