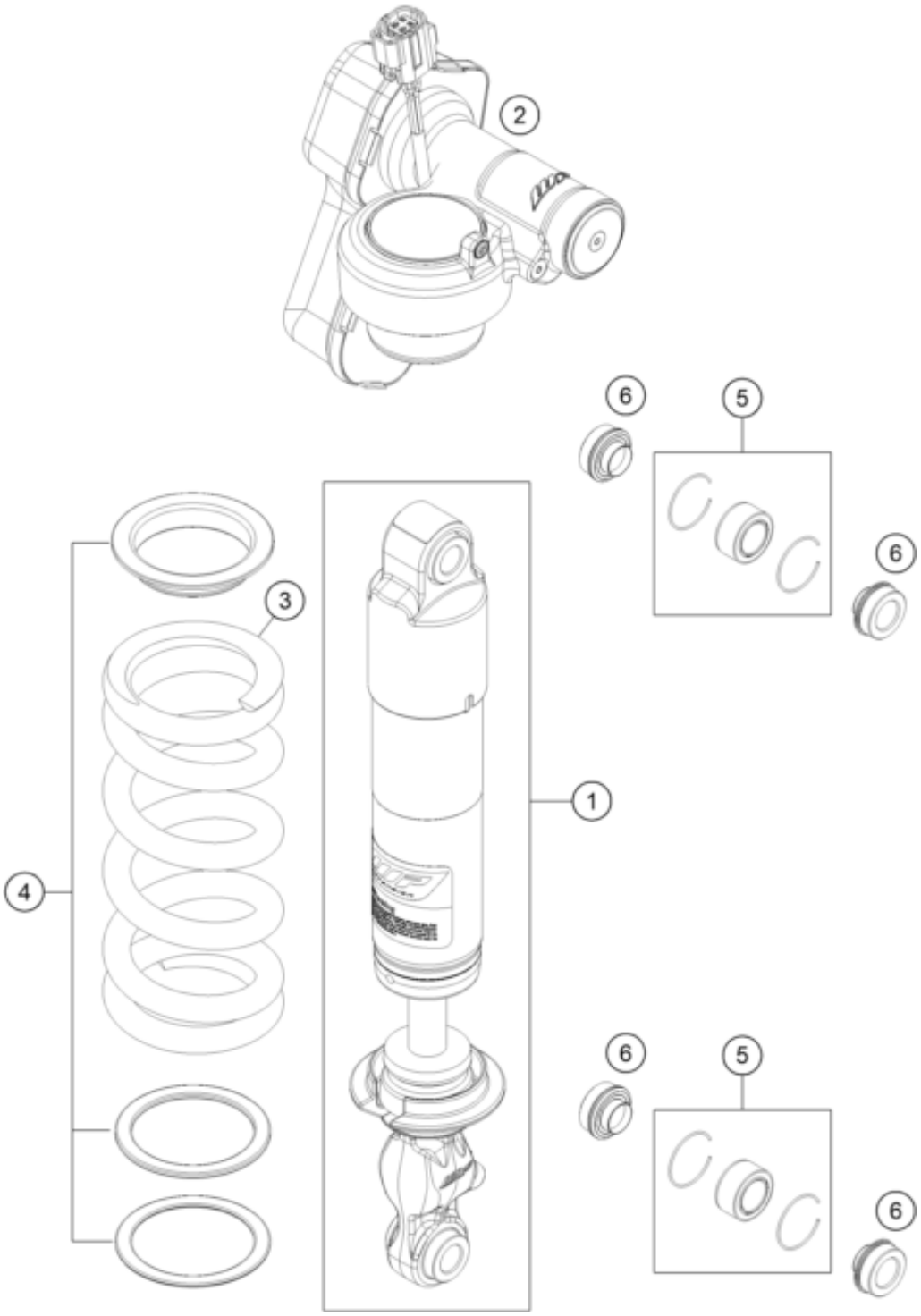

Pos	Part Number	Description	Additional Text	Quantity
1	46812001S1	MONOSHOCK ASSEMBLY GROUP		1.00
2	15000O01	PA cpl. KTM EDS		1.00
3	91010328	SPRING (59) 160-200 D 14,5 BL.		1.00
4	R15023	REP. KIT SPRING WASHER		1.00
5	R12012	Ball joint bearing kit top 12m		2.00
6	46181307E	Bearing bush 14x15/23,5x14,45		4.00